S9514-FL-MMA-010

0910-LP-102-0743

[*SGML VERSION; SEE CHANGE RECORD*]
TECHNICAL MANUAL

DESCRIPTION, OPERATION, MAINTENANCE, AND INSTALLATION INSTRUCTIONS FOR

REFRIGERANT MONITOR PARASENSE MODEL 3300FSV-N

DISTRIBUTION STATEMENT C: DISTRIBUTION AUTHORIZED TO U.S. GOVERNMENT AGENCIES AND THEIR CONTRACTORS; ADMINISTRATIVE/OPERATIONAL USE; 30 MARCH 2003. OTHER REQUESTS FOR THIS DOCUMENT SHALL BE REFERRED TO NAVAL SEA SYSTEMS COMMAND (SEA-09T).

WARNING: THIS DOCUMENT CONTAINS TECHNICAL DATA WHOSE EXPORT IS RESTRICTED BY THE ARMS EXPORT CONTROL ACT (TITLE 22, U.S.C. SEC. 2751 ET. SEQ.) OR EXECUTIVE ORDER 12470. VIOLATIONS OF THESE EXPORT LAWS ARE SUBJECT TO SEVERE CRIMINAL PENALTIES.

DESTRUCTION NOTICE: DESTROY BY ANY METHOD THAT WILL PREVENT DISCLOSURE OF CONTENTS OR RECONSTRUCTION OF THIS DOCUMENT.

THIS MANUAL SUPERSEDES NAVSEA S9514-FL-MMC-010 DATED 14 APRIL 2001 AND ALL CHANGES THERETO.

PUBLISHED BY DIRECTION OF COMMANDER, NAVAL SEA SYSTEMS COMMAND

30 MAR 2003

CHANGE RECORD

CHANGE NO.	CHANGE DATE	DESCRIPTION OF CHANGE

NOTE

THIS TECHNICAL MANUAL (TM) HAS BEEN DEVELOPED FROM AN INTELLIGENT ELECTRONIC SOURCE KNOWN AS STANDARD GENERALIZED MARKUP LANGUAGE (SGML). THERE IS NO LOEP. ALL CHANGES, IF APPLICABLE, ARE INCLUDED. THE PAGINATION IN THIS TM WILL NOT MATCH THE PAGINATION OF THE ORIGINAL PAPER TM; HOWEVER, THE CONTENT IS EXACTLY THE SAME. ANY CHANGES RECEIVED AFTER RECEIPT OF THIS TM WILL ONLY FIT IN THIS PAGINATED VERSION.

FOREWORD

This manual provides information and instructions for the Parasense Refrigerant Monitor, Model 3300FSV-N. It is intended for the guidance of personnel who install and operate the equipment and consists of the following chapters and class specific appendices.

Chapter 1 General Information

Chapter 2 Operation and User Guide

Chapter 3 Functional Description

Chapter 4 Scheduled Maintenance

Chapter 5 Troubleshooting

Chapter 6 Corrective Maintenance

Chapter 7 Parts List

Chapter 8 Installation

Appendices

Ships, training activities, supply points, depots, Naval Shipyards, and Supervisors of Shipbuilding are requested to arrange for the maximum practical use and evaluation of NAVSEA technical manuals. All errors, omissions, discrepancies, and suggestions for improvement to NAVSEA technical manuals shall be forwarded to:
COMMANDER
CODE 5E30
NAVSURFWARCENDIV
4363 MISSILE WAY
PORT HUENEME CA 93043-4307
on NAVSEA Technical Manual Deficiency/Evaluation Report, NAVSEA form 4160/1. All feedback comments shall be thoroughly investigated and originators will be advised of action resulting therefrom. One copy of NAVSEA form 4160/1 is included at the end of each separately bound technical manual 8-1/2 x 11 inches or larger. Copies of NAVSEA form 4160/1 may be requisitioned from the Naval Systems Data Support Activity Code 5E30 at the above address. Users are encouraged to transmit deficiency submittals via the Naval Systems Data Support Activity Web page located at:
<http://nsdsa.phdnswc.navy.mil/tmder/tmder.htm>

Individual electronic TMs do not contain NAVSEA 4160/1 but are linked to an electronic version on the resident CD-ROM. Therefore, we encourage the user to transmit deficiency submittals via the Naval Systems Data Support Activity Web page located above.

TABLE OF CONTENTS

Chapter/Paragraph		Page
1	**GENERAL INFORMATION**	1-1
1-1	INTRODUCTION	1-1
1-2	DESCRIPTION	1-1
1-3	PROCEDURES FOR ELECTROSTATIC SENSITIVE DEVICES	1-2
1-3.1	HANDLING ELECTROSTATIC SENSITIVE COMPONENTS.	1-2
1-3.2	INSTALLATION OF ELECTROSTATIC SENSITIVE COMPONENTS.	1-3
1-3.3	PACKING MATERIALS FOR ELECTROSTATIC SENSITIVE COMPONENTS.	1-3
1-4	PARASENSE SE8000 SOFTWARE	1-3
2	**OPERATION AND USER GUIDE**	2-1
2-1	STANDARD SCREENS AND COMMANDS	2-1
2-2	TRAFFIC LIGHT DISPLAY AND BEACON SOUNDER	2-1
2-3	KEYPAD FUNCTIONS	2-2
2-4	PASS CODES	2-2
2-5	IDLE SCREEN	2-2
2-6	SYSTEM OPTIONS	2-3
2-6.1	SAMMS LIST.	2-3
2-6.1.1	MANUAL SAMPLE.	2-5
2-6.1.2	ALARM INHIBIT/ALARM ENABLE.	2-6
2-6.2	ENTIRE SYSTEM.	2-6
2-6.3	MANAGEMENT OPTIONS.	2-8
2-7	MONITOR SETUP	2-9
2-7.1	ACCESS MANAGEMENT OPTIONS.	2-9
2-7.2	SETUP OPTIONS.	2-10
2-7.3	DETECTOR SETUP.	2-10
2-7.4	MONITOR NETWORK.	2-11
2-7.5	SAMMS SETUP.	2-11
2-7.6	RELAY SETUP.	2-15
2-7.7	COMMS SETUP (RS-232).	2-16
2-8	OTHER MANAGEMENT OPTIONS	2-16
2-8.1	EVENTS LIST.	2-16
2-8.2	FAULTS LIST.	2-17
2-8.3	SYSTEM TEST.	2-17

TABLE OF CONTENTS - Continued

Chapter/Paragraph		Page
	2-8.4 CALIBRATION CHECK.	2-18
	2-8.5 ENTERING A NEW PASS CODE.	2-18
2-9	DEFAULT CONFIGURATION	2-19
2-10	USING THE PARASENSE SE8000 SOFTWARE	2-20
2-11	WATCHSTANDER'S LOGS	2-20
3	**FUNCTIONAL DESCRIPTION**	3-1
3-1	INTRODUCTION	3-1
3-2	THEORY OF OPERATION	3-1
3-3	DESCRIPTION OF OPERATION	3-1
4	**SCHEDULED MAINTENANCE**	4-1
4-1	INTRODUCTION	4-1
5	**TROUBLESHOOTING**	5-1
5-1	INTRODUCTION	5-1
5-2	GENERAL	5-1
5-3	PROBLEMS	5-1
	5-3.1 LOSS OF POWER.	5-1
	5-3.2 BLANK SCREEN.	5-2
	5-3.3 SYSTEM FAULT.	5-2
6	**CORRECTIVE MAINTENANCE**	6-1
6-1	INTRODUCTION	6-1
6-2	COMPONENT REPLACEMENT	6-1
	6-2.1 ENCLOSURE DOOR.	6-1
	6-2.2 NETWORK MODULE.	6-2
	6-2.3 SAMPLING MODULE (SAMM).	6-4
	6-2.4 STYX MODULE.	6-7
	6-2.5 POWER SUPPLY MODULE.	6-10
	6-2.6 BEACON SOUNDER.	6-11
6-3	TESTING	6-12
	6-3.1 SYSTEM TEST.	6-12
	6-3.2 AIR FLOW TEST.	6-13

TABLE OF CONTENTS - Continued

Chapter/Paragraph		Page
6-4	CALIBRATION	6-14
	6-4.1 CALIBRATION CHECK.	6-14
7	**PARTS LIST**	7-1
7-1	INTRODUCTION	7-1
7-2	EXPLANATION OF COLUMNS	7-1
	7-2.1 FIG & INDEX NO.	7-1
	7-2.2 PART NO.	7-1
	7-2.3 DESCRIPTION.	7-1
	7-2.4 COMMERCIAL AND GOVERNMENT ENTITY (CAGE).	7-1
	7-2.5 QUANTITY.	7-1
	7-2.6 LIST OF MANUFACTURERS.	7-5
8	**INSTALLATION**	8-1
8-1	PRELIMINARY	8-1
	8-1.1 LOCATION.	8-1
	8-1.2 ELECTRICAL REQUIREMENTS.	8-2
8-2	ENCLOSURE MOUNTING	8-3
8-3	SAMPLE PIPING INSTALLATION	8-4
8-4	REMOTE BEACON SOUNDER	8-7
8-5	RELAY CONNECTIONS	8-8
	8-5.1 NETWORK MODULE RELAYS.	8-8
	8-5.2 PILOT RELAY.	8-8
8-6	POST INSTALLATION CHECKS	8-9
A	**(AGF 3)**	A-1
B	**(AGF 11)**	B-1
C	**(AOE)**	C-1
SECTION C1	**(AOE 1)**	C-1
SECTION C2	**(AOE 2; UNDER DEVELOPMENT)**	C-9
SECTION C3	**(AOE 3 & 4)**	C-10
D	**(T-AOE 6 Class)**	D-1
E	**(ARS 50 Class)**	E-1

TABLE OF CONTENTS - Continued

Chapter/Paragraph		Page
F	**(AS 39 Class)**	F-1
G	**(CG 47 Class)**	G-1
H	**(CV/CVN)**	H-1
SECTION H1	**(CV 63)**	H-1
SECTION H2	**(CV 67)**	H-19
SECTION H3	**(CVN 65)**	H-32
SECTION H4	**(CVN 68 CLASS)**	H-44
I	**(DD 963 Class)**	I-1
J	**(DDG 51 Class)**	J-1
K	**(FFG 7 Class)**	K-1
L	**(LCC)**	L-1
SECTION L1	**(LCC 19)**	L-1
SECTION L2	**(LCC 20)**	L-7
M	**(LHA 1 Class)**	M-1
N	**(LHD 1 Class)**	N-1
O	**(LPD 4 Class)**	O-1
P	**(LSD)**	P-1
SECTION P1	**(LSD 36 CLASS)**	P-1
SECTION P2	**(LSD 41-43)**	P-5
SECTION P3	**(LSD 44-48)**	P-11
SECTION P4	**(LSD 49 CLASS)**	P-17

LIST OF TABLES

Table	Title	Page
2-1.	Navy Configuration Settings	2-19
7-1.	Special Tools and Materials	7-1
7-2.	Parasense 3300FSV-N Refrigerant Monitor Parts List	7-2
	APPENDIX LIST	Rear-1

LIST OF ILLUSTRATIONS

Figure	Title	Page
1-1.	Parasense Monitor	1-2
1-2.	Operator’s Keypad Display	1-2
2-1.	Idle Screen	2-3
2-2.	System Options	2-3
2-3.	View Samms List	2-4
2-4.	View Samms Options	2-4
2-5.	View Alarms List	2-4
2-6.	View History Graph	2-5
2-7.	View Audit Report	2-5
2-8.	Manual Sample	2-6
2-9.	Alarm Inhibit/Alarm Enable	2-6
2-10.	View Entire System Options	2-7
2-11.	View Alarms List	2-7
2-12.	View Alarms Graph	2-7
2-13.	Audit Reports	2-8
2-14.	Global Enable/Global Inhibit	2-8
2-15.	Select Management Options	2-9
2-16.	Management Options	2-10
2-17.	Detector Setup Options	2-10
2-18.	Detector Setup	2-11
2-19.	Set Up Monitor Network	2-11
2-20.	Samms Setup	2-12
2-21.	Add Additional SAMMs	2-12
2-22.	Initialize a SAMM	2-13
2-23.	Set Alarm Levels	2-13
2-24.	Remove a SAMM	2-14

LIST OF ILLUSTRATIONS - Continued

Figure	Title	Page
2-25.	Change Refrigerant Type	2-14
2-26.	Set Pipe Length	2-15
2-27.	Relay Setup	2-16
2-28.	COMMS Setup	2-16
2-29.	Events List	2-17
2-30.	Faults List	2-17
2-31.	System Test	2-18
2-32.	Calibration Check	2-18
2-33.	Entering a New Pass Code	2-19
2-34.	Watchstander's Logs	2-21
3-1.	Sample Flow	3-2
3-2.	Typical Spur Kit Arrangement	3-3
6-1.	Monitor Door Replacement	6-2
6-2.	Network Module Mounting Plate	6-3
6-3.	Network Module Wiring Removal	6-4
6-4.	SAMM Wiring Removal	6-5
6-5.	SAMM Air Hose Removal	6-6
6-6.	SAMM Removal (underside view of enclosure)	6-6
6-7.	Styx Module Wiring Removal	6-8
6-8.	Styx Module Air Hose Removal	6-9
6-9.	Styx Module Removal	6-9
6-10.	Power Supply Module Replacement	6-11
6-11.	Calibration Gas Cylinder and Reservoir	6-14
7-1.	Parasense 3300FSV-N Refrigerant Monitor (Sheet 1 of 2)	7-3
8-1.	Refrigerant Monitor Enclosure Installation Clearances	8-1
8-2.	Beacon Sounder Installation Dimensions	8-2

LIST OF ILLUSTRATIONS - Continued

Figure	Title	Page
8-3.	Shock Isolator Installation Dimensions	8-2
8-4.	Incoming AC Supply Connections	8-3
8-5.	Monitor Warning and Caution Labels	8-4
8-6.	Bulkhead/Deck Penetrator	8-6
8-7.	Remote Beacon Sounder	8-7
8-8.	Typical Beacon Sounder Wiring Diagram	8-8
8-9.	Typical Relay Electrical Connections	8-9

SAFETY SUMMARY

GENERAL SAFETY NOTICES. The following general safety notices supplement the specific warnings and cautions appearing throughout this manual. They are recommended precautions that must be understood and applied during operation and maintenance of the equipment covered herein. If situations arise that are not covered in the general or specific safety precautions, the commanding officer or other authority will issue orders as deemed necessary to cover the situation.

DO NOT REPAIR OR ADJUST ALONE. Repair or adjustment of energized equipment should never be attempted alone; someone capable of rendering aid must be immediately present. Before making adjustments, be sure to take precautions against grounding. If possible, adjustments should be made with one hand, with the other hand free and clear of equipment. Even when power has been removed from equipment circuits, dangerous potentials may still exist due to retention of charges by capacitors. Circuits must be grounded and all capacitors discharged before attempting repairs.

TEST EQUIPMENT. Make certain test equipment is in good condition. If a test meter must be held, ground the case of the meter before taking measurements; do not touch live electrical circuits, or personnel working on live electrical circuits while holding a test meter. Some types of measuring devices should not be grounded; these devices should not be held when taking measurements.

RESUSCITATION. Personnel working with or near high voltages should be familiar with modern methods of resuscitation. Such information may be obtained from the Bureau of Medicine and Surgery.

WARNINGS AND CAUTIONS. Warnings and cautions appearing throughout the text of this manual are repeated here for emphasis.

WARNING

When a flashing red light is present on the traffic light display, or any beacon sounder is activated, exit the space immediately and notify supervisory personnel; do not reenter the space without appropriate breathing protection. When a steady red or yellow light is present on the traffic light display, immediately notify supervisory personnel; with proper ventilation, continued occupation of the space is allowed. (Page 2-1)

WARNING

Dangerous voltages are present. Use extreme caution when working in the vicinity of live electrical circuits. (Page 5-1, page 5-2)

WARNING

Prior to accomplishing corrective maintenance, open the circuit breaker to the refrigerant monitor and tag "DANGER, DO NOT OPERATE." (Page 6-1, page 6-3, page 6-5, page 6-7, page 6-10, page 6-11)

WARNING

Verify all circuits are deenergized, and all capacitors are discharged prior to accomplishing corrective maintenance. (Page 6-1, page 6-3, page 6-5, page 6-7, page 6-10, page 6-11)

CAUTION

Access to the "Management" section will allow personnel to modify system settings, disable alarms, or corrupt system data, which could result in improper system operation. (Page 2-2, page 2-9)

CAUTION

Initializing a SAMM will overwrite all current configuration data and should only be performed when the default commercial configuration is desired. If initializing a SAMM is not desired, proceed to step c. (Page 2-12)

CAUTION

This equipment contains components that are sensitive to electrostatic discharge. Refer to paragraph 1-3 for guidance when working on electrostatic discharge sensitive equipment. (Page 5-1, page 5-2, page 6-1, page 6-3, page 6-5, page 6-7, page 6-10, page 6-11)

CAUTION

The position of all cables, wires, and hoses should be clearly identified prior to removal. (Page 6-4, page 6-5, page 6-7, page 6-10, page 6-12)

CAUTION

Do not remove the brown knurled cap from the reservoir valve. Disassembly of the reservoir valve and loss of calibration gas will result. (Page 6-12, page 6-14)

CAUTION

Do not overfill or allow any internal pressure to build within the reservoir as bursting may result. Overfilling can be avoided by not allowing the reservoir surface to become taut. (Page 6-12, page 6-15)

CAUTION

Failure to provide a proper electrical ground for the enclosure may result in improper operation of the monitor. (Page 8-3)

CAUTION

All sample pipes branching from a common spur must be equal in length. (Page 8-5)

CAUTION

Do not position the sample filters where they could become immersed in liquid of any kind. (Page 8-5)

CAUTION

Changing the monitor configuration prior to completion of the self test could result in damage to the network module. (Page 8-10)

CHAPTER 1

GENERAL INFORMATION

1-1. INTRODUCTION

This technical manual provides personnel with safety precautions, operating instructions, detailed system and component descriptions, fault isolation guidelines, maintenance procedures, and installation instructions for the Parasense Refrigerant Monitor, Model 3300FSV-N. The “N” at the end of the model number indicates that the monitor meets Grade A mechanical shock requirements, and has been modified for shipboard use.

1-2. DESCRIPTION

a. The Parasense 3300 Series monitors are advanced refrigerant leak detection devices utilizing infrared absorption sensors to analyze air samples. The component arrangement of a typical monitor is shown in figure 1-1

b. Monitors are available with four or eight individual sampling modules (SAMM), each having their own pump and filter. Typically, each SAMM is connected to the sample area by semi-rigid polyethylene tubing, called “freeways.” The specific area can be further subdivided into smaller regions using a manifold with multiple sampling pipes known as a “spur kit” (refer to chapter 8, Installation). This multiple sampling technique ensures likely sources of refrigerant leakage are specifically targeted.

c. Alarms can be generated at three different levels described as “Alert,” “Alarm,” and “Critical.” These alarms can be signalled to other devices using the four configurable relays, the two RS-232 communication ports, or the RS-485 communication port. On some ships, the alarm signal is sent to a continuously manned remote location (e.g., Central Control Station or Damage Control Central) to alert supervisory personnel of a refrigerant leak. If the monitor is not mounted within sight of the entrance to the monitored space, a remote beacon sounder can be used to alert personnel that an alarm condition exists. The current alarm status and an analysis of alarms over the preceding 10 days are indicated on the operator’s keypad display (see figure 1-2). Details of system alarms, events, and readings are stored within the monitor and can be accessed via the operator’s keypad. Local and remote access is also available through the RS-232 connection using Parasense SE8000 PC software (refer to paragraph 1-4).

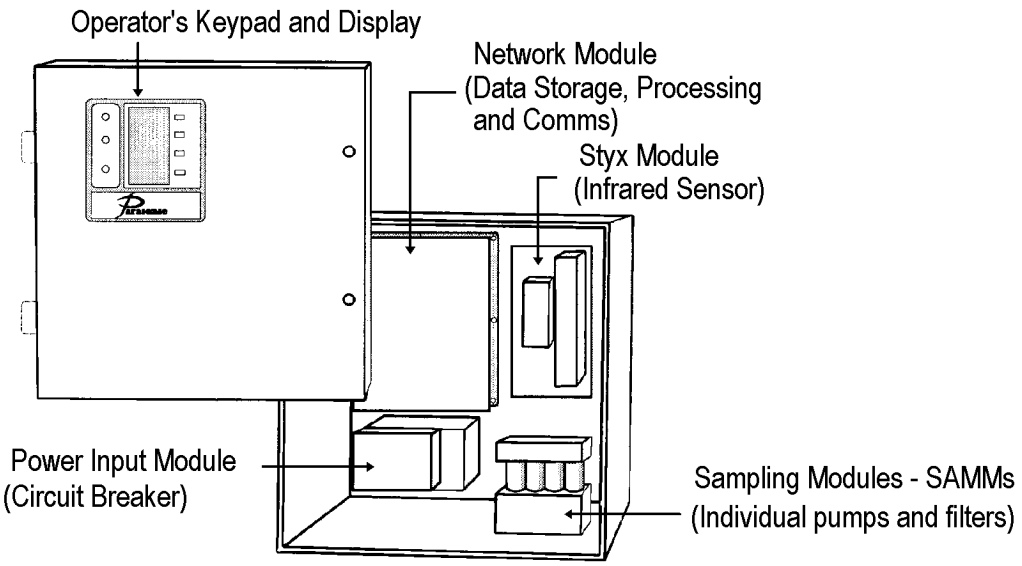

Figure 1-1. Parasense Monitor

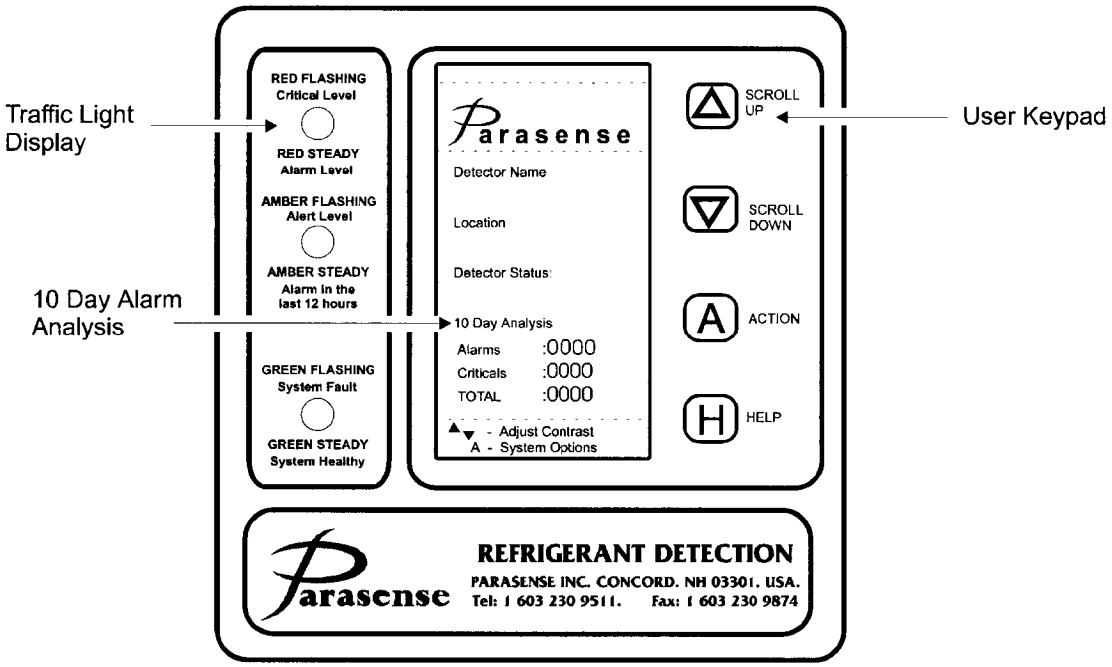

Figure 1-2. Operator’s Keypad Display

1-3. PROCEDURES FOR ELECTROSTATIC SENSITIVE DEVICES

Electrostatic damage to components is a significant problem which, in most cases, is preventable. Operational testing may detect components destroyed by electrostatic discharge, but components with only slight damage may function during testing and not be detected. Once returned to service, the field life of these components is significantly reduced.

1-3.1 HANDLING ELECTROSTATIC SENSITIVE COMPONENTS. Assembly or handling of printed circuit boards (PCBs) which contain electrostatic sensitive components should be accomplished in a static-controlled

environment. Static-controlled environments consist of electrically-grounded, conductive floor mats, bench top mats, personal wrist straps, stool covers, parts trays, a transformer isolated soldering station, a low-static discoloring tool, and an ionized air blower. For more information on handling electrostatic sensitive components, refer to technical manual NAVSEA SE004-AK-TRS-010/2M.

1-3.2 INSTALLATION OF ELECTROSTATIC SENSITIVE COMPONENTS. Install electrostatic sensitive components using portable antistatic equipment consisting of conductive floor mats, a ground strap with clip, and a personal wrist strap. Integral grounding of the main assembly and the technician (with a wrist strap) must be established before any subassembly is removed from its conductive plastic bag or before the subassembly is installed.

1-3.3 PACKING MATERIALS FOR ELECTROSTATIC SENSITIVE COMPONENTS. Any spare part packed with black conductive foam or in a black conductive plastic bag must not be removed from its packing material until the technician is in a static-controlled environment. Conductive packing material removed from replacement spare parts should be saved and used to pack defective items. Additional packing material must be applied over the conductive packing if the item is to be shipped to the depot or manufacturer.

1-4. PARASENSE SE8000 SOFTWARE

Parasense SE8000 software allows a personal computer (PC) to interface with the monitor via the external RS-232 communication port. This software is provided in the service kit, or can be ordered separately (see table 7-1 for ordering information). Although computer interface by ship's personnel is not mandatory, it allows for information download, and faster configuration uploads. Refer to paragraph 2-10 for a description of the Parasense SE8000 software and its use.

CHAPTER 2

OPERATION AND USER GUIDE

2-1. STANDARD SCREENS AND COMMANDS

The Parasense 3300 series monitor has a door mounted “traffic light” alarm display, a liquid crystal display (LCD) panel and a 4-button keypad (see figure 1-2). All of the monitor’s features can be accessed or viewed from here by using the keypad functions as described below.

2-2. TRAFFIC LIGHT DISPLAY AND BEACON SOUNDER

All Parasense refrigerant monitors have identical traffic light alarm displays. The traffic light display gives “at a glance” system status of any of the SAMMs and is interpreted as follows:

Red Flashing:	The most recent measurement of refrigerant concentration from one or more of the SAMMs has exceeded the critical level.
Red Steady:	The most recent measurement of refrigerant concentration from one or more of the SAMMs has exceeded the alarm level.
Amber Flashing:	The most recent measurement of refrigerant concentration from one or more of the SAMMs has exceeded the alert level.
Amber Steady:	An alarm has occurred in the last 12 hours.
Green Flashing:	A fault exists.
Green Steady:	The refrigerant monitor is operating at design specifications; all conditions normal.

WARNING

When a flashing red light is present on the traffic light display, or any beacon sounder is activated, exit the space immediately and notify supervisory personnel; do not reenter the space without appropriate breathing protection. When a steady red or yellow light is present on the traffic light display, immediately notify supervisory personnel; with proper ventilation, continued occupation of the space is allowed.

For shipboard applications, a beacon sounder is mounted on top of the monitor (see figure 7-1 and figure 8-2). The beacon sounder provides an audiovisual signal of an unsafe condition, prompting personnel to evacuate the compartment. For extremely large or noisy spaces, installation of additional beacon sounders may be necessary. The beacon sounder is activated by one of the four relays on the network module. The duration of relay activation is determined by the configuration settings. A switch on the front of each beacon sounder will silence its respective sounder; the red beacon remains lit until the associated relay contacts open.

2-3. KEYPAD FUNCTIONS

See figure 1-2 for keypad location.

2-3.1 The SCROLL UP and SCROLL DOWN keys are used to select a menu option, change a number or character, or scroll a pointer or cursor through a list or graph.

2-3.2 The ACTION key executes the option selected or the parameter adjustment that has been made.

2-3.3 Operating the HELP key will provide instruction in the operation of the detector specific to the function selected. If more than one page of text is available, this may be accessed by using the SCROLL UP and SCROLL DOWN keys to locate more information. Operating the HELP key again will return the screen to the selected menu.

2-3.4 Use the SCROLL UP and SCROLL DOWN keys to select a menu option followed by the ACTION key to execute the option. Use the SCROLL UP and SCROLL DOWN keys to adjust a parameter followed by the ACTION key to execute the adjustment.

2-4. PASS CODES

Certain menu selections are protected by a four digit pass code to prevent unauthorized changes in set-up data or detector operation. The pass code is entered by using the SCROLL UP and SCROLL DOWN keys to adjust the first digit of the code followed by the ACTION key to accept that digit. The rest of the code is entered sequentially, in the same manner. To abort the pass code selection at any stage, enter an “X” followed by the ACTION key. If the wrong code is selected after entering the fourth digit, entry will be denied and the previous screen displayed. When the monitor is in management mode, normal automatic functions are paused.

CAUTION

Access to the “Management” section will allow personnel to modify system settings, disable alarms, or corrupt system data, which could result in improper system operation.

The “Management” level pass code, available from the Engineer Officer, allows personnel to inhibit alarms, and configure, modify, or setup the system operating data.

2-5. IDLE SCREEN

Following application of power, or if the monitor keys have not been used for approximately 5 minutes, the idle screen will appear. See figure 2-1. The display contrast can be adjusted using the SCROLL UP and SCROLL DOWN keys.

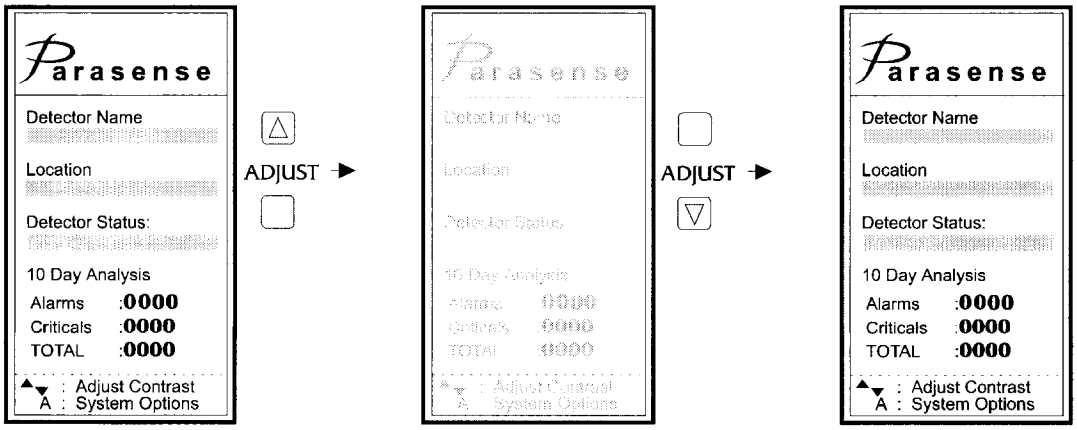

Figure 2-1. Idle Screen

2-6. SYSTEM OPTIONS

The “System Options” screen has four functions. See figure 2-2.

1. Samms List: To display a list of the individual SAMMs with their current status, including refrigerant type being detected, alarm set points, and the level in parts per million (ppm) of the most recent reading. This option will also provide entry to the menu screen giving historic data and control to the individual SAMMs.

2. Management: To gain entry to the Management section, refer to Monitor Setup in paragraph 2-7.

3. Entire System: To provide entry to the menu screens giving historic data and control for the entire system.

4. *BACK*: To return to the idle screen.

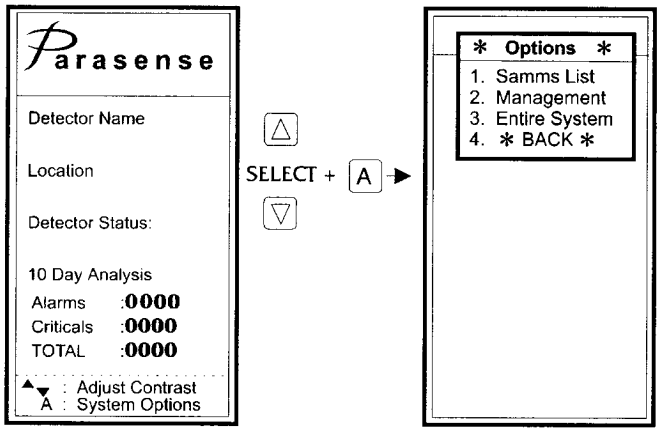

Figure 2-2. System Options

2-6.1 SAMMS LIST. Figure 2-3 through figure 2-7 illustrate use of the keypad to select various parameters available under the “Samms List” option.

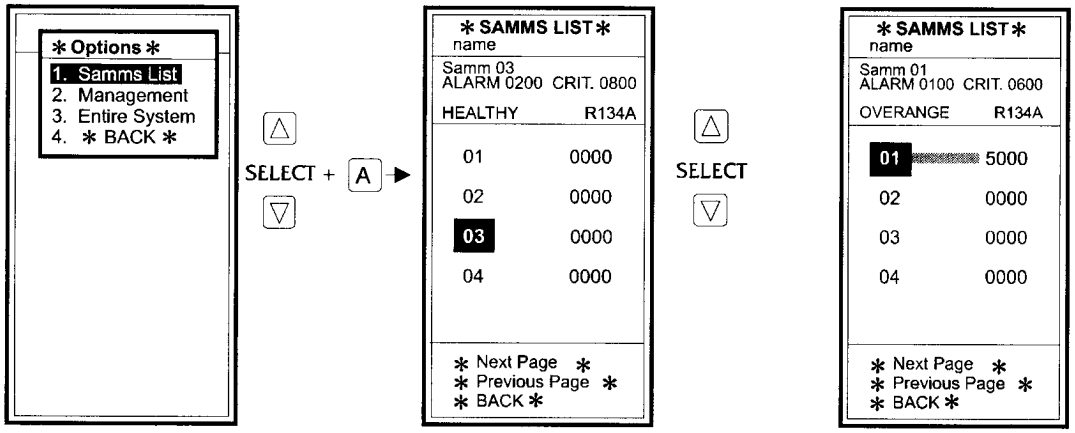

Figure 2-3. View Samms List

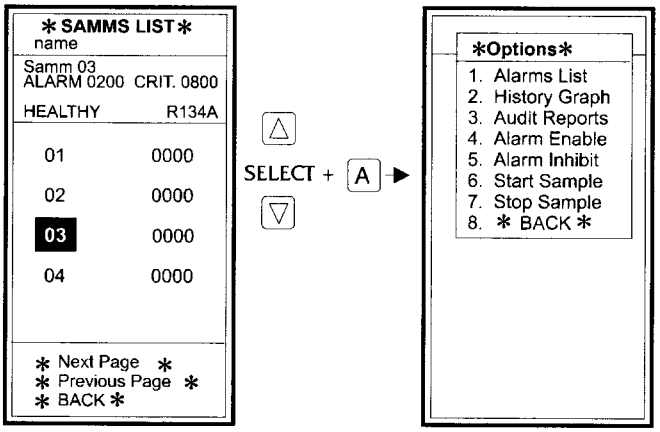

Figure 2-4. View Samms Options

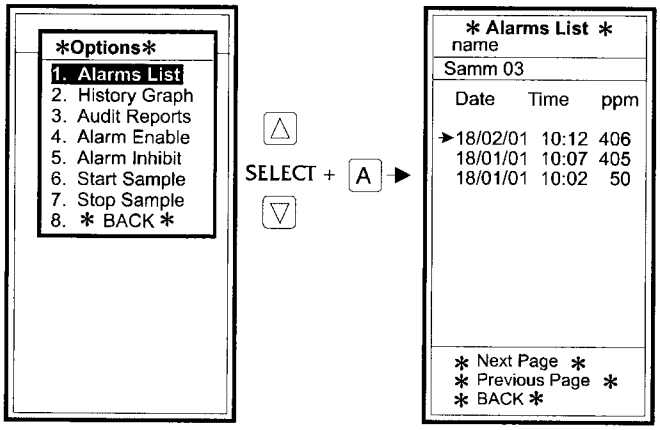

Figure 2-5. View Alarms List

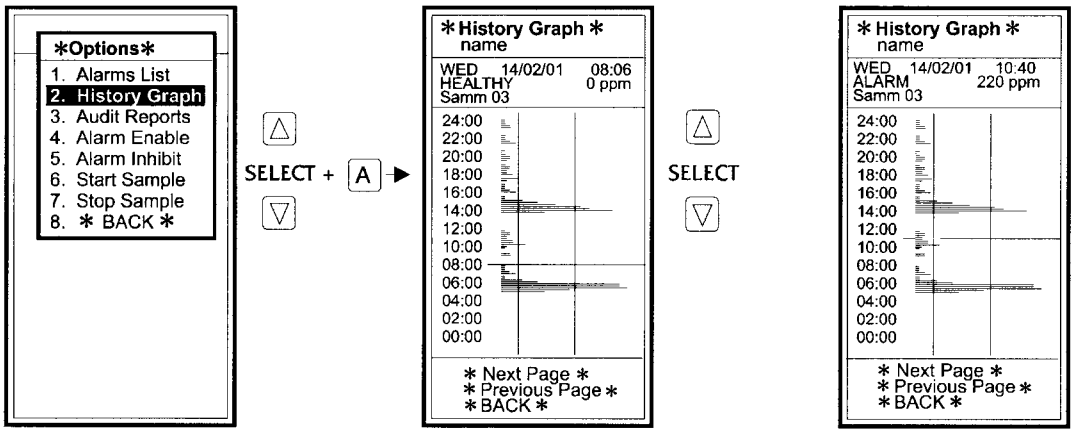

Figure 2-6. View History Graph

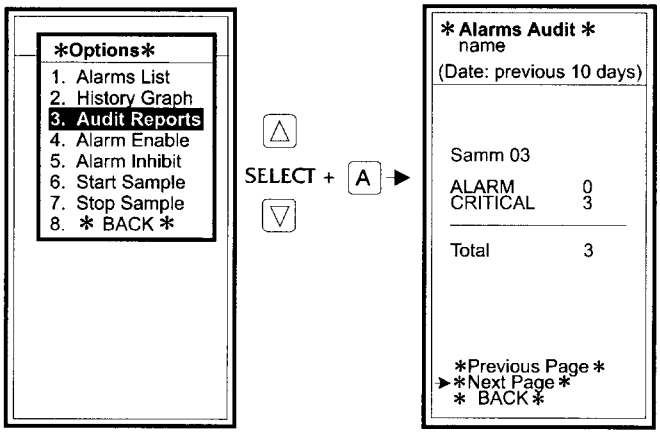

Figure 2-7. View Audit Report

2-6.1.1 MANUAL SAMPLE. To invoke a manual sample outside of the programmed sequence, select a SAMM from the “Samms List,” followed by the ACTION key. See figure 2-8. Select “Start Sample” followed by the ACTION key. The sample will be taken, the traffic light will operate as applicable and the “Samms List” information will be updated. Manual sample readings will not affect the relays or be recorded in the logs.

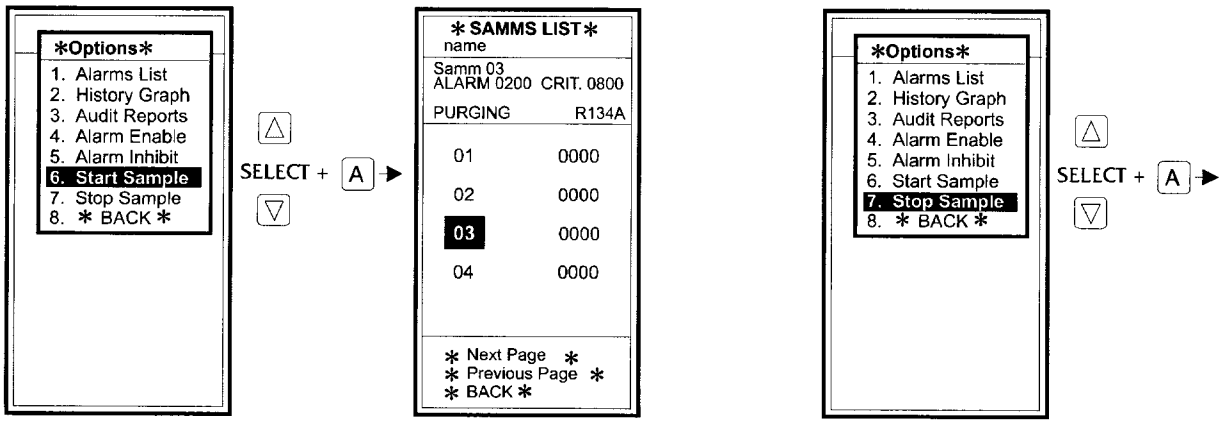

Figure 2-8. Manual Sample

2-6.1.2 ALARM INHIBIT/ALARM ENABLE. Alarms from an individual SAMM can be inhibited by selecting "Alarm Inhibit" followed by the ACTION key. See figure 2-9. Enter the four digit "user" pass code followed by the ACTION key. Inhibit will remain in effect for a period of 12 hours or until "Alarm Enable" is selected. While a SAMM is inhibited, it will continue to sample, log, and operate the traffic lights.

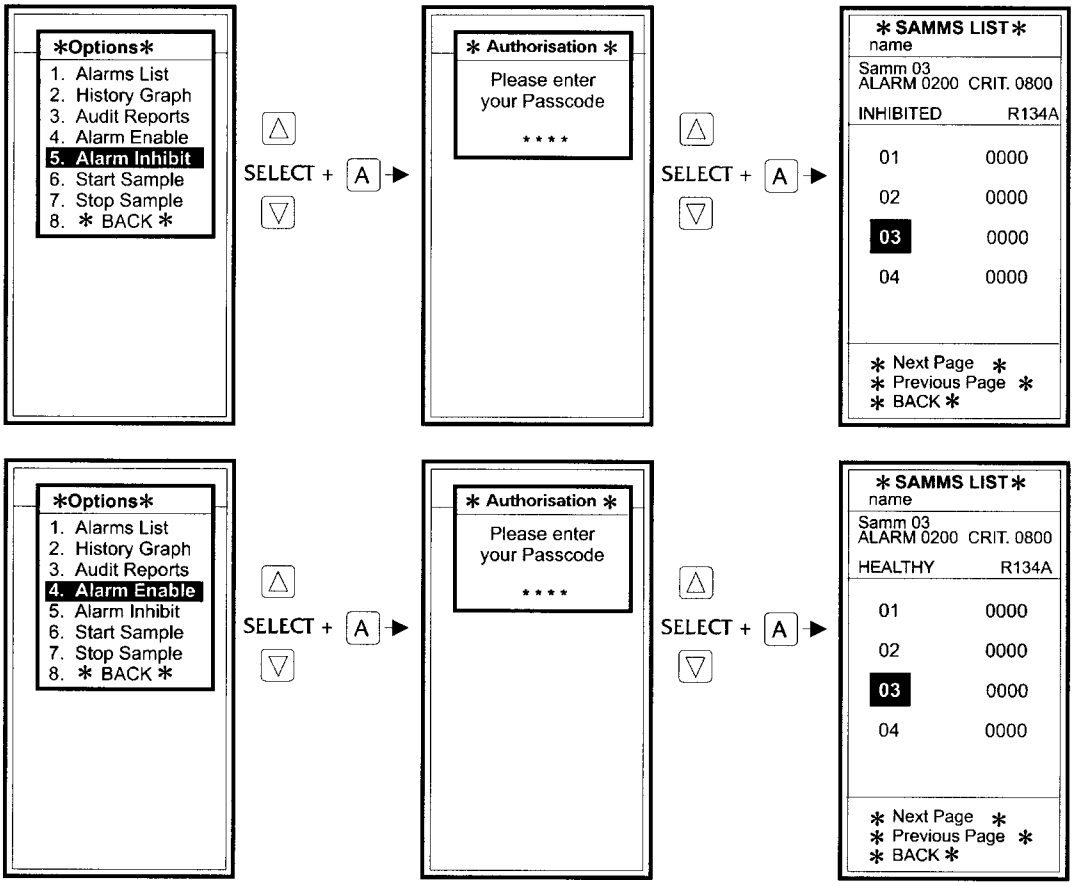

Figure 2-9. Alarm Inhibit/Alarm Enable

2-6.2 ENTIRE SYSTEM. Other options for the entire system are illustrated in figure 2-10 through figure 2-13

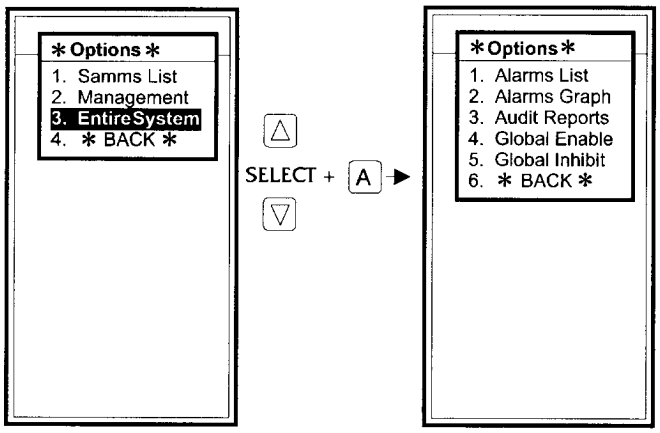

Figure 2-10. View Entire System Options

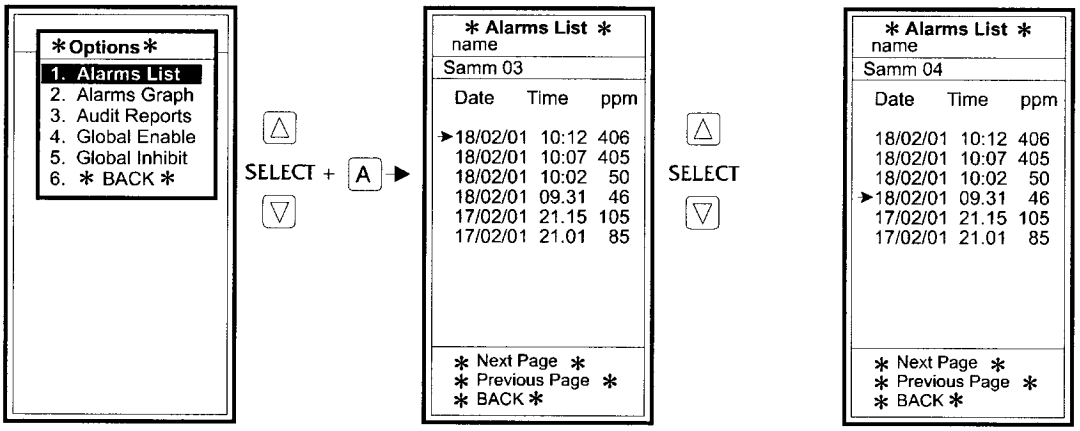

Figure 2-11. View Alarms List

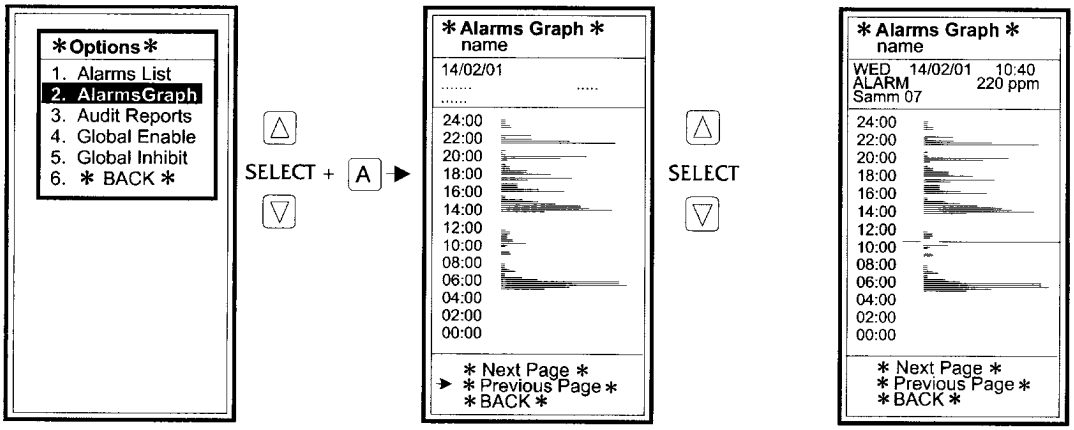

Figure 2-12. View Alarms Graph

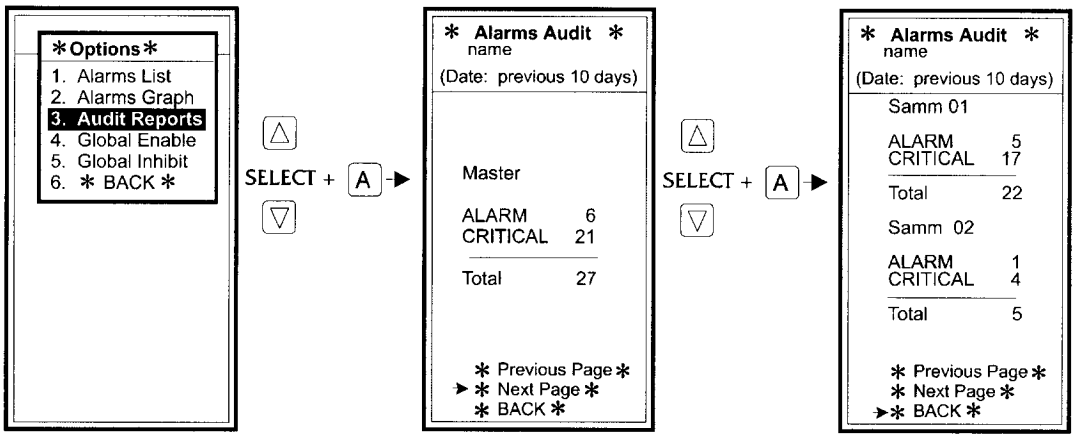

Figure 2-13. Audit Reports

a. Alarms from the entire system can be inhibited by selecting “Global Inhibit” and entering the four digit “user” pass code, followed by the ACTION key. See figure 2-14. After entering the pass code and pressing the ACTION key, the display will return to the idle screen and the SAMMs list will indicate INHIBITED for any SAMM selected. Inhibit will remain in effect for a period of 12 hours or until “Global Enable” is selected. While the system is inhibited, it will continue to sample, log, and operate the traffic lights.

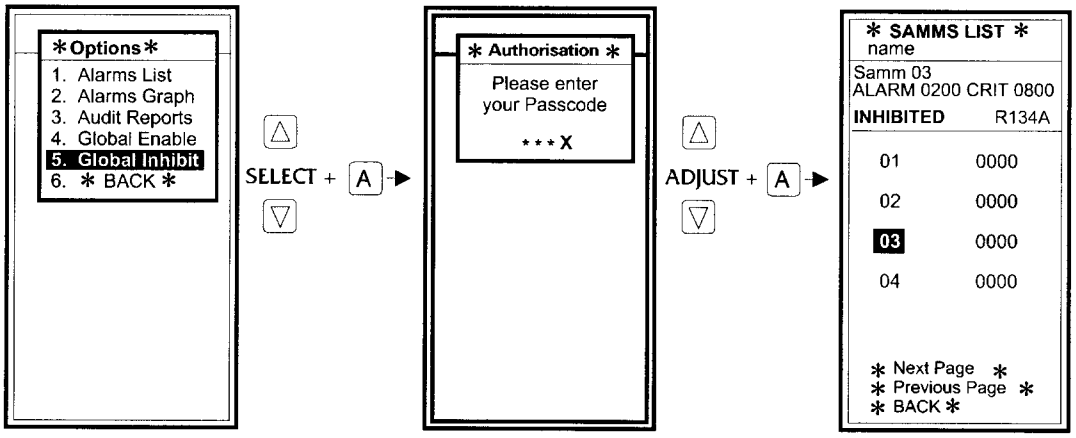

Figure 2-14. Global Enable/Global Inhibit

2-6.3 MANAGEMENT OPTIONS. If the proper four digit “management” pass code is entered, the Management Option screen will be displayed. Access to the Management Option screen will automatically end if the keypad has not been used for approximately 5 minutes.

The Management Option screen has seven functions. See figure 2-16.

a. Setup Options: To access the options to configure, modify, or set up the operating data within the monitor.

b. Events List: To display a schedule of management generated events.

c. Faults List: To display a list of system faults.

d. System Test: To invoke a system test. This will cause each channel to take a sample in sequence, starting with channel 1. Following this, sampling will revert to the normal configured times.

e. Calibr. Check: To carry out a calibration check.

f. New Passcode: To input a new four digit management pass code number.

g. *BACK*: To return to the idle screen.

2-7. MONITOR SETUP

CAUTION

Access to the "Management" section will allow personnel to modify system settings, disable alarms, or corrupt system data, which could result in improper system operation.

The factory installed Navy configuration data is provided in table 2-1. Specific ship or class configuration data is provided in the Appendices which are based on initial shipcheck data and will not be updated. However, they can be used as a guide during monitor setup. To modify any of the existing configuration data, access the "Management" section as illustrated in figure 2-15. Interfacing the monitor with a PC and uploading ship specific configuration data from a Parasense "Leak Configuration File" (LKF) is much faster and less susceptible to error. Refer to paragraph 2-10 for a description of the Parasense SE8000 software and its use.

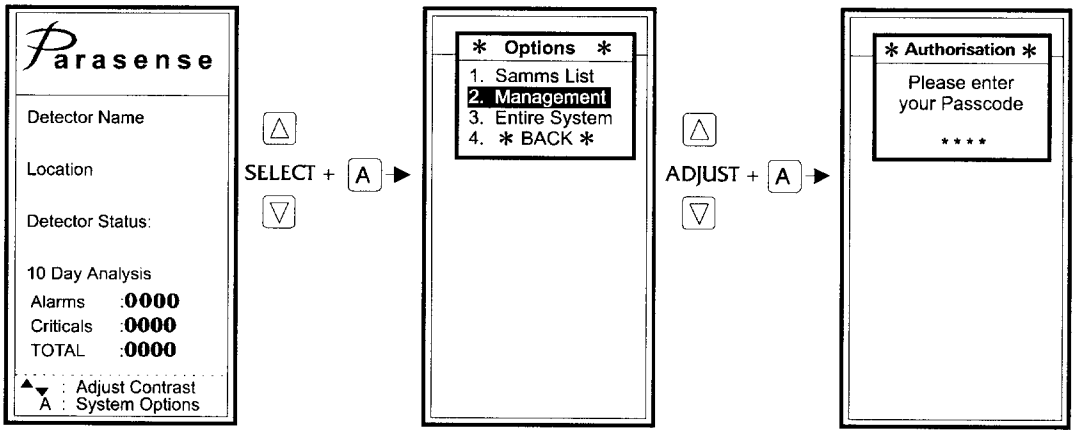

Figure 2-15. Select Management Options

2-7.1 ACCESS MANAGEMENT OPTIONS. If the proper four digit "management" pass code is entered, the Management Option screen will be displayed as illustrated in figure 2-16. Access to the Management Option screen will automatically end if the keypad has not been used for approximately 5 minutes.

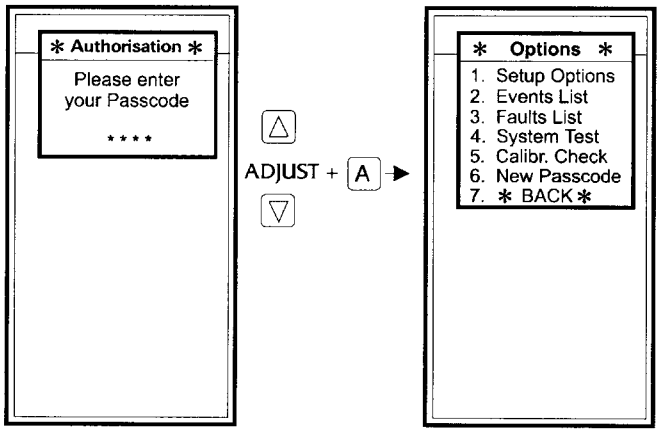

Figure 2-16. Management Options

2-7.2 SETUP OPTIONS. Select “Setup Options” as illustrated in figure 2-17.

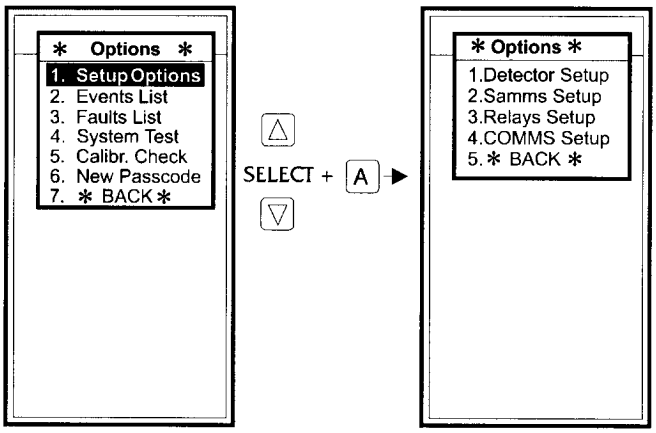

Figure 2-17. Detector Setup Options

2-7.3 DETECTOR SETUP. Select “Detector Setup” as illustrated in figure 2-18.

a. Enter the “Detector name” (refer to the applicable appendix).

b. Using the date of installation, enter the “Commissioning Date” (may appear as “Handover Date” on later software versions).

c. Enter the current date and time.

d. If “Units system” is selected to “Metric”, the date will be displayed as D/M/Y and pipe length will be in meters. If “Imperial” is selected, the date will be displayed as M/D/Y and pipe length will be in feet. Select “Imperial.”

e. If “Alert Level Masking” is ON, ppm values below the alert level will show as 0000 on the Samms List. However, correct readings will be recorded in the “History Log.” Select ″OFF″ for “Alert Level Masking.”

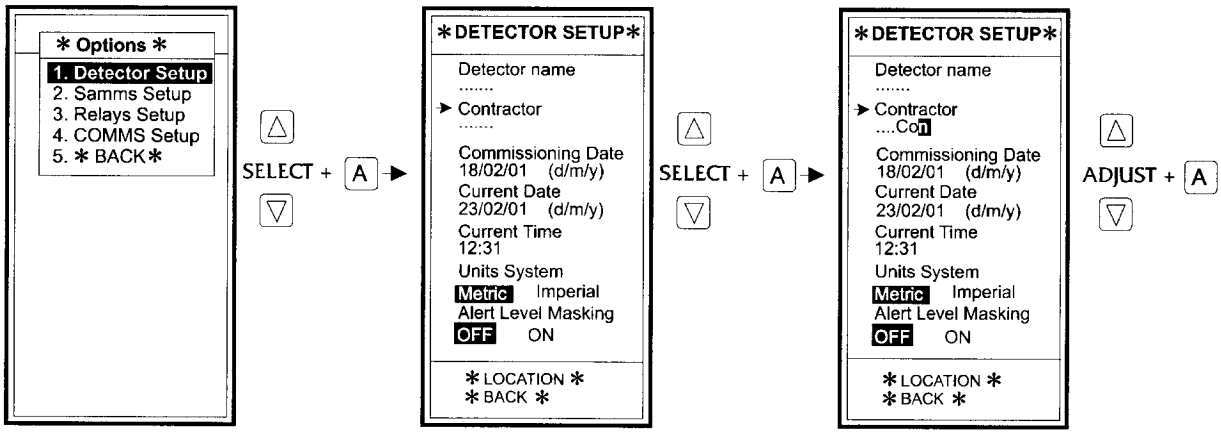

Figure 2-18. Detector Setup

2-7.4 MONITOR NETWORK. Monitors can be set up for network operation as illustrated in figure 2-19. This function is only required when two or more monitors are combined to form a network. Parameters must not be changed for a single-monitor configuration.

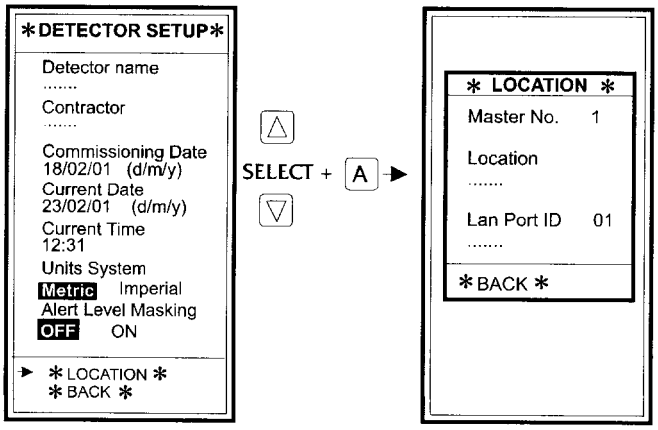

Figure 2-19. Set Up Monitor Network

2-7.5 SAMMS SETUP. Select Samms Setup as illustrated in figure 2-20. SAMM ID numbers correspond with the pump number on the network module, and the associated pump on the SAMMs. The individual SAMMs are numbered from left to right, with 1-4 towards the rear, and 5-8 towards the front of the enclosure. Other data such as “SAMM Name,” “Alarm Levels,” and “Operation” information will be set to the factory installed Navy configuration (see table 2-1), but can be adjusted to suit the installation.

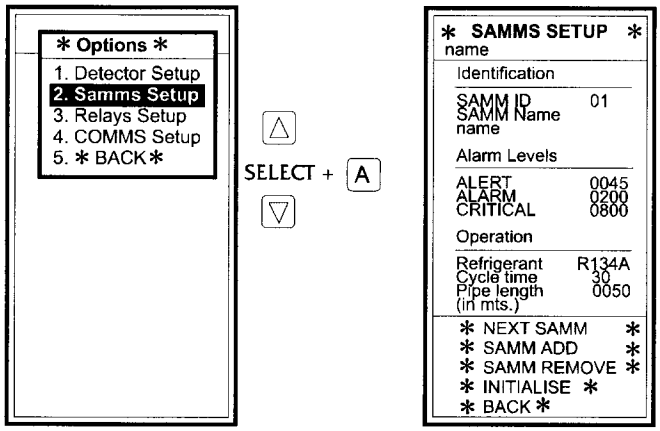

Figure 2-20. Samms Setup

a. Select SAMM ADD as illustrated in figure 2-21, followed by the ACTION key; the next available SAMM ID number will be added. Use the SCROLL UP and SCROLL DOWN keys to highlight and adjust the number to correspond with the added SAMM ID, and then select BACK. Scroll the pointer down to the other parameters to be changed or added followed by the ACTION key. Using the SCROLL UP and SCROLL DOWN keys followed by the ACTION key, input the other configuration details (refer to the applicable appendix).

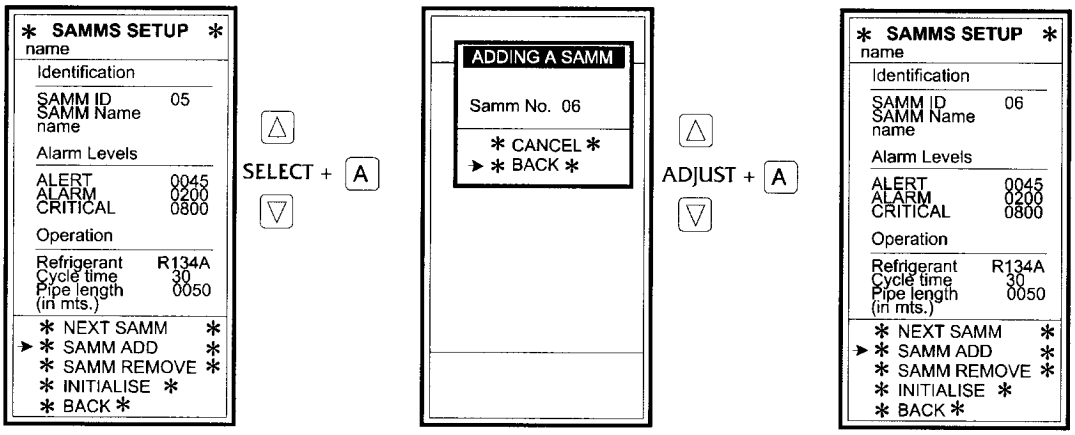

Figure 2-21. Add Additional SAMMs

CAUTION

Initializing a SAMM will overwrite all current configuration data and should only be performed when the default commercial configuration is desired. If initializing a SAMM is not desired, proceed to step c.

b. Initializing a SAMM as illustrated in figure 2-22 will install the default commercial configuration data (not provided) and overwrite all data for that specific SAMM. After selecting the SAMM ID followed by the ACTION key, select INITIALISE to install the default commercial configuration data.

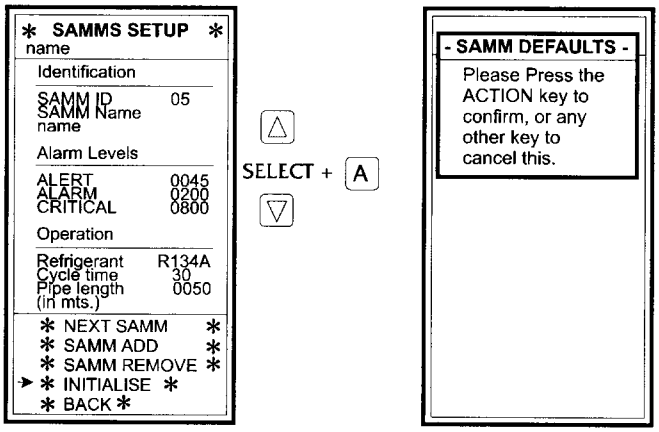

Figure 2-22. Initialize a SAMM

c. Alarm levels are set as illustrated in figure 2-23. Set the Alert level to 0050; the Alarm level to 0300; and the Critical level to 0850.

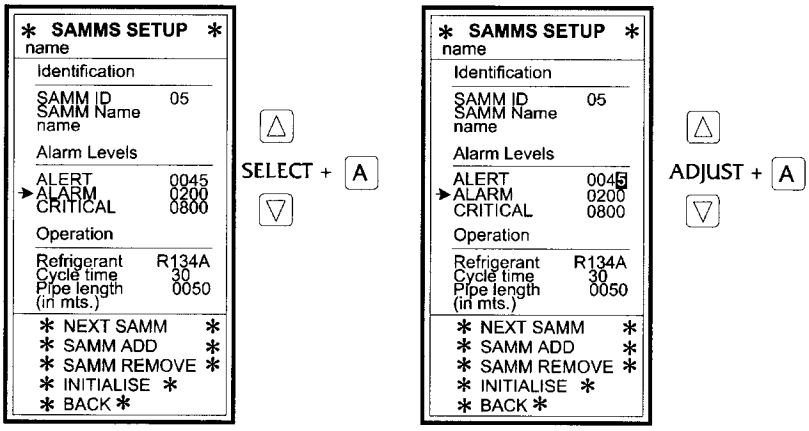

Figure 2-23. Set Alarm Levels

NOTE

New network modules are configured for eight SAMMs. If a new network module is installed in a monitor using less than eight SAMMs, unused SAMM channels should be removed from the network module configuration.

d. SAMM removal is accomplished as illustrated in figure 2-24.

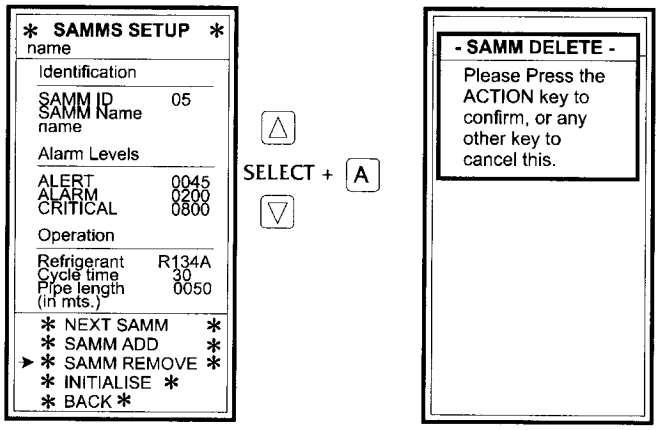

Figure 2-24. Remove a SAMM

e. Change “Refrigerant” type as illustrated in figure 2-25.

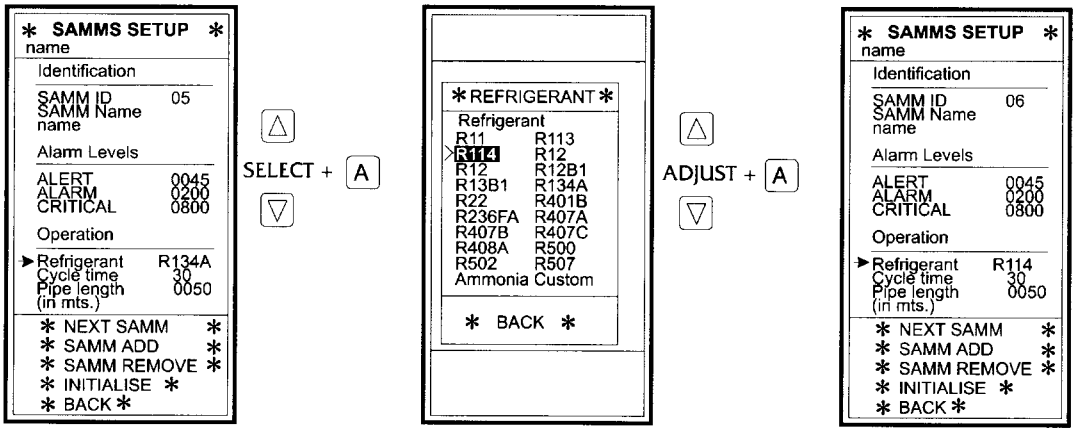

Figure 2-25. Change Refrigerant Type

f. Set “Pipe length” as illustrated in figure 2-26. The pipe length is the length of the freeway plus the length of the spur kit and is used to determine the length of time required to purge airways between sampling. Although actual pipe length may be less, the pipe length setting should always be set to at least 100 feet to allow a minimum 10 second purge time. If more than 100 feet of freeway piping is actually used, adjust “Pipe length” accordingly (up to a maximum of 300 feet).

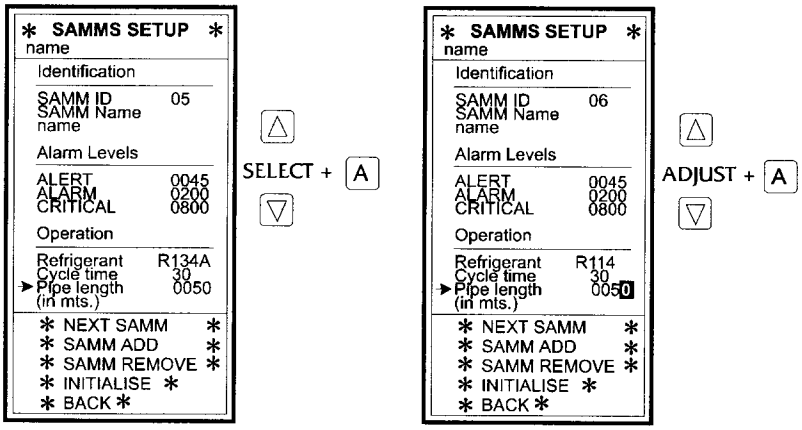

Figure 2-26. Set Pipe Length

g. "Cycle time" is the time interval between samples on a particular SAMM. It is entered in whole minutes and is calculated based on purge time and sampling time. Purge time is the time required to clear the freeway of air and to deliver a fresh sample for analysis; this takes approximately 1 second for every 10 feet of 6.0 mm diameter pipe. Sampling time is the time required for the infrared detector to process the air sample and report the concentration; this takes approximately 30 seconds. Therefore, one complete cycle for an 8-channel monitor with 250 feet of freeway on each channel is:
8 x (30 sec + 25 sec) = 440 sec (7.33 minutes)
"Cycle time" should not be set to less than the calculated cycle time. In the previous example, this would require selecting a "Cycle time" of at least 8 minutes (selecting 7 minutes would be less than the 440 seconds calculated).

For simplicity and uniformity, 10 minutes is used in all Navy applications.

2-7.6 RELAY SETUP. Select "Relays Setup" as illustrated in figure 2-27. Four separate volt-free changeover relays are provided on the Network Module, rated at 1.0 amp (resistive). External contact voltages should not exceed 30 volts DC. A 24-volt DC 250-mA supply is available adjacent to the relays if required to drive beacons, etc.

a. A plus sign (+) associated with a SAMM indicates the relay will activate if a ppm reading in excess of the critical level is detected, or if three consecutive readings are between the alarm and critical levels. Depending on relay configuration, the relay may remain activated until the next sample level for that SAMM is below the alarm level.

b. The relay can be configured to operate in a continuous or pulsed mode. Highlighting "Contin." (normally used for beacons and sounders) followed by the ACTION key will cause the contacts to change state and remain in that position until the high ppm level is cleared. Highlighting "Pulsed" (normally used for auto-dialers) followed by the ACTION key will cause the contacts to change state and hold that position for a set number of minutes. This period can be set by selecting the "Pulse (m)" option. For Navy applications, the continuous mode is used.

c. Each relay can be set to be activated by any SAMM in the system or only by SAMMs in a selected group by selecting the "Mode" option. The "Logic" function will allow the relays to change for a single SAMM if "Any One" is selected. If "All" is selected, the relay will not change state unless all SAMMs in the system or group have reached or cleared an alarm level.

d. To prevent repeated dial-outs, relays can be inhibited for a defined period; this function should not be confused with the 12-hour inhibit function available from the Samms List.

e. During periods of nonoccupation (night time) a multiplying factor can be associated with the alarm level, i.e., an alarm level of 200 ppm during day time with a “Day Factor” of 1.0 will activate a relay if 200 ppm plus is read. An alarm level of 200 ppm during night time with a “Night Factor” of 2.0 will need to reach 400 ppm plus, before a relay will activate. Critical level relay activation is not affected by this factor.

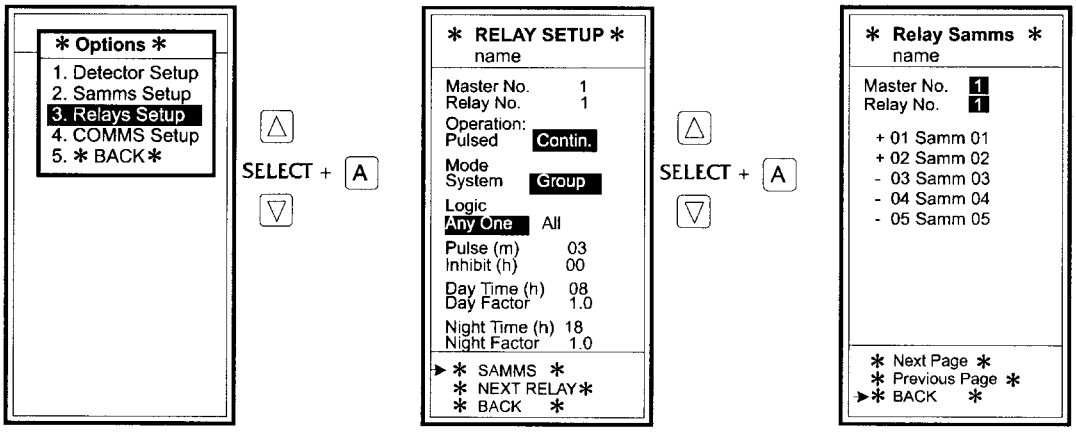

Figure 2-27. Relay Setup

2-7.7 COMMS SETUP (RS-232). Select “COMMS Setup” from the management “Setup Options” as illustrated in figure 2-28. Adjusting remote and local speed to the desired settings using the SCROLL UP and SCROLL DOWN keys followed by the ACTION key.

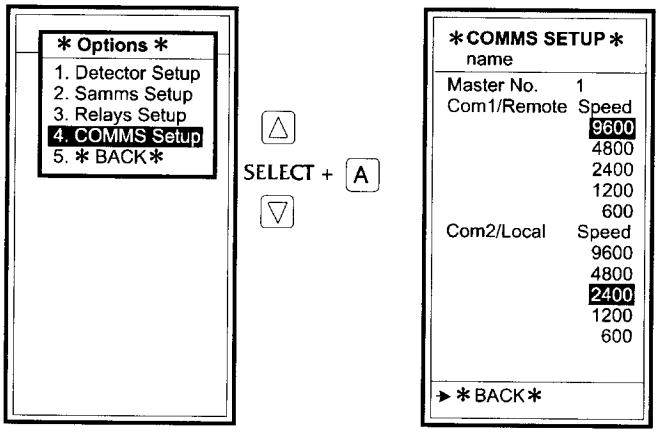

Figure 2-28. COMMS Setup

2-8. OTHER MANAGEMENT OPTIONS

2-8.1 EVENTS LIST. Select “Events List” from the management options as illustrated in figure 2-29. View the desired parameter using the SCROLL UP and SCROLL DOWN keys followed by the ACTION key.

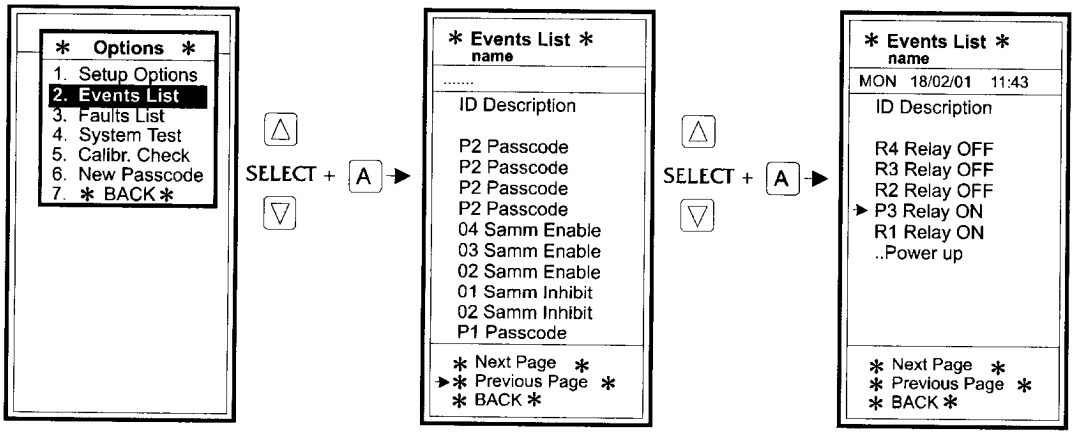

Figure 2-29. Events List

2-8.2 FAULTS LIST. Select “Faults List” from the management options as illustrated in figure 2-30. View the desired parameter using the SCROLL UP and SCROLL DOWN keys followed by the ACTION key.

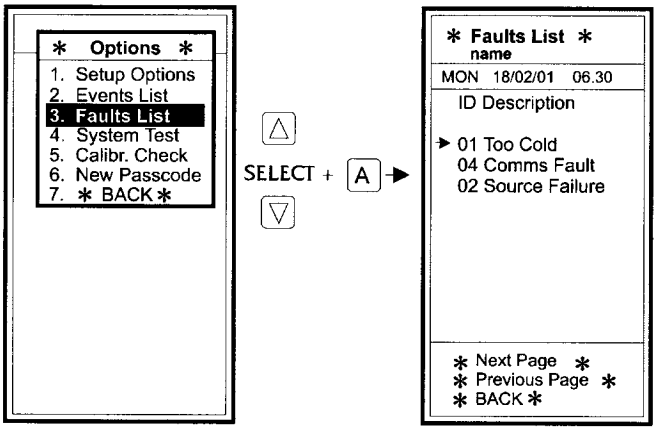

Figure 2-30. Faults List

2-8.3 SYSTEM TEST. Select “System Test” from the management options as illustrated in figure 2-31. By selecting “START” followed by the ACTION key, a system test will commence. All SAMMs will sample in sequence, updating logs and activating relays if applicable. The system will revert to normal operation after all SAMMs have sampled once or if “STOP” is selected followed by the ACTION key.

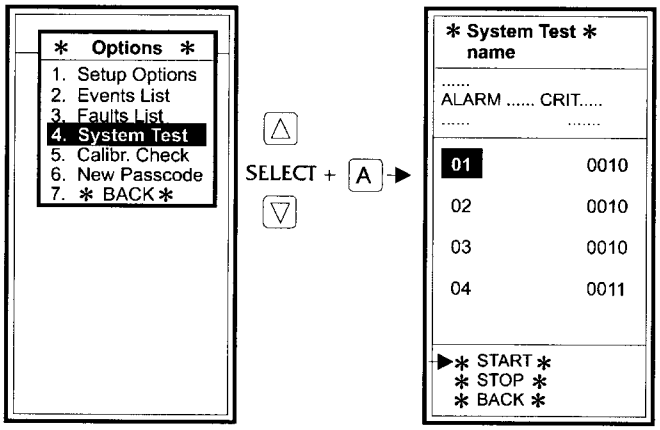

Figure 2-31. System Test

2-8.4 CALIBRATION CHECK. A calibration check can be accomplished by the user and is fully described in paragraph 6-4. Select "Calibr. Check" from the management options as illustrated in figure 2-32.

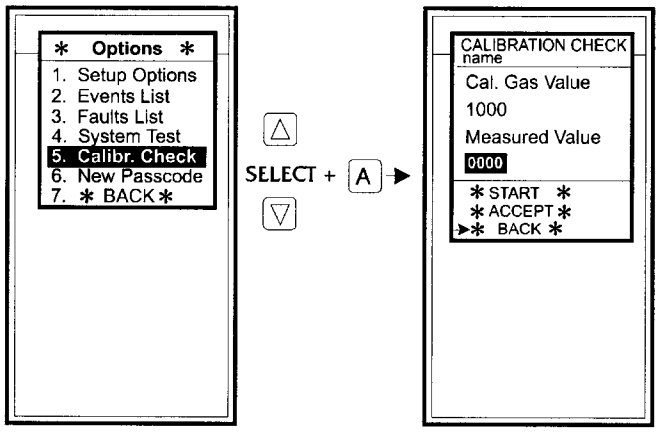

Figure 2-32. Calibration Check

2-8.5 ENTERING A NEW PASS CODE. Access to the management options is gained by entering a four digit "management" pass code, issued by Parasense. While in the management mode, an additional four digit "user" pass code can be entered as illustrated in figure 2-33. Use the SCROLL UP and SCROLL DOWN keys followed by the ACTION key to select each number. Finally, select "ACCEPT" followed by the ACTION key.

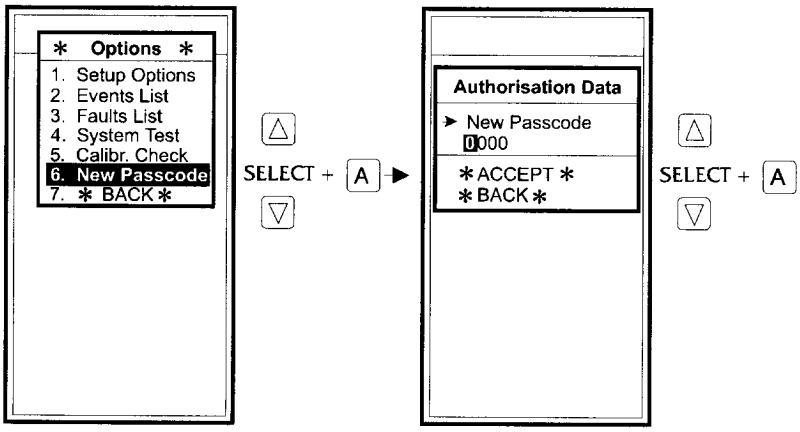

Figure 2-33. Entering a New Pass Code

2-9. DEFAULT CONFIGURATION

New monitors and network modules for Navy applications are configured at the factory to the settings of table 2-1 which differ from the commercial default configuration (not provided). Access the Management Options menu to modify these settings (refer to paragraph 2-7).

Table 2-1. Navy Configuration Settings

SYSTEM	Detector name	SHIP CLASS
	Contractor	Ship's Crew
	Commissioning Date	03/20/00
	Units System	Imperial
	Alert Level Masking	OFF
	Location	Compartment Number
	Com1/Remote Speed	9600 bps
	Com2/Local Speed	9600 bps
	LAN Address	1
RELAYS	Operation	Continuous
	Logic	Any One
	Mode	System
	Pulse (m)	3 minutes
	Inhibit (h)	0 hours
	Day Time (h)	0600
	Day Factor	2.8
	Night Time (h)	1800
	Night Factor	2.8
SAMMS	SAMM Name	Channel 1, 2, 3, 4....
	ALERT	50 ppm
	ALARM	300 ppm
	CRITICAL	850 ppm
	Pipe length	100 feet
	Refrigerant	R134A
	Cycle Time	10 minutes

2-10. USING THE PARASENSE SE8000 SOFTWARE

The Parasense SE8000 software must be loaded onto a PC in order to allow interface with the monitor. Two versions of the Parasense SE8000 software are available; one version for Windows ’95, ’98, Millenium, and XP (provided on two 3.5-inch floppy diskettes); and another version for Windows 2000, and NT (provided on compact disk). Both versions are supplied in the service kit.

a. Follow the instructions provided with the software to load the program onto the PC.

b. Connect the PC to the monitor using the monitor communication lead provided in the service kit.

c. Open the SE8000 program. A picture of the monitor display will appear. To access the setup menu, right click in the black area of the monitor display.
   (1) In the setup menu, select “Preferences.” Ensure the correct COMMS port for the PC is selected. Select “Ok.”
   (2) In the setup menu, select “Configure.” Verify “Direct local connection” is selected. Verify detector baud rate is selected to “9600.” Select “Ok.”

NOTE

LKF files are not provided with the SE8000 software. The installing activity should request copies of the LKF files from the Naval Surface Warfare Center Carderock Division (NSWCCD) or the nearest Fleet Technical Support Center (FTSC) representative.

d. To upload an LKF file from the PC to the monitor, proceed as follows:
   (1) In the setup menu, select “Open Site.” Locate the specific LKF file and select “Open.”
   (2) In the setup menu, select “Connect.”
   (3) In the setup menu, select “Transmit” to open the “Leak Detection Transmit Options” menu. Select “Send Site Information,” “Send Relay configuration,” and “Remove unused Samms at the detector” by clicking in the box adjacent to each option. “Choose the SAMMs to send” using a combination of the “check mark” and “right arrow” buttons. After selections are complete, select “Ok.” The red light on the PC will flash while the file is being transmitted. When file transmission is complete, the SE8000 main screen will reappear.
   (4) Cycle power to the monitor off and then back on.
   (5) After the 60-second self test, all appropriate SAMMs will begin to operate.
   (6) Ensure data upload was successful by verifying the information displayed on the monitor agrees with the information displayed on the PC.

e. After interfacing between the PC and the monitor is complete, in the setup menu, select “Disconnect” and exit the SE8000 program.

2-11. WATCHSTANDER’S LOGS

Watchstander’s logs should be modified to include routine monitoring of the Parasense refrigerant leak monitor. Ships are encouraged to incorporate the information found on figure 2-34 when modifying ship’s logs.

AIR CONDITIONING (or REFRIGERATION) EQUIPMENT OPERATING LOG									
HOURS								LEAK MONITOR	
MAX									
NORM								**G**	
MIN									
0000									
0100									
2200									
2300									

Codes for Leak Monitor indications: **G**-Green (System Healthy), **GF**-Green Flashing (System Fault), **A**-Amber (Alarm in Last 12 Hours), **AF**-Amber Flashing (Alert Level), **R**-Red (Alarm Level), **RF**-Red Flashing (Critical Level).

Figure 2-34. Watchstander's Logs

CHAPTER 3

FUNCTIONAL DESCRIPTION

3-1. INTRODUCTION

The Parasense 3300FSV-N refrigerant monitor consists of five key components designed to be easily replaced without the use of special tools. A typical schematic layout is shown in figure 1-1. The operator's keypad and display consists of the enclosure door, keypad, LCD display, traffic light status indicator, and electronics. The newtork module contains the microprocessors and circuitry that control the display, local and remote communication interfaces, sample management, and data storage. The styx module contains the infrared sensor, optics, final filtration, control solenoid valves, and calibration data circuitry. Sampling modules, or SAMMs, consist of a block of four or eight individual pumps and secondary filters that are used to draw samples from the remote locations. The power input module consists of the power connection terminals, circuit breaker, and transient suppression circuitry.

3-2. THEORY OF OPERATION

Pressure transient induced infrared absorption (PTIA) and pyro-electric sensor is used to measure gas concentration. The detectable gases are governed by their individual infrared absorption spectra. Most chlorinated or fluorinated hydrocarbons used in refrigeration or air conditioning applications have an absorption spectra in the range of 6 to 14 microns. The Parasense 3300FSV-N uses a broad band filter in the range of 8 to 11 microns to enable a response to a range of gases.

3-3. DESCRIPTION OF OPERATION

The method of operation is best explained with reference to figure 3-1. The network control module organizes the SAMMs to selectively draw samples of air from the remote pipework in accordance with the user configuration. Sample intervals range from 2 to 60 minutes. The first operation is to purge the sample lines. This is achieved by operating the SAMM pump with the sample control valve shut, and the purge valve open. This allows the sample gas to pass through the purge solenoid valve and out the exhaust. After completing the purge cycle, the sample control valve opens and the purge valve shuts, diverting the sample gas through the styx module and out the exhaust until the styx chamber has been purged. The sample analysis is conducted by shutting the sample control valve and allowing pressure to build inside the styx chamber until it reaches the control pressure. The SAMM pump is now stopped, allowing pressure in the styx module to stabilize. The sample control valve is opened and the resulting pressure transient in the styx chamber stimulates infrared absorption in the sample gas. If the sample contains one of the target gases, the infrared "signature" is detected by the pyro-electric detector and sent to the network module for analysis and subsequent action. The monitor then returns to the idle state by shutting the sample control valve and opening the purge valve.

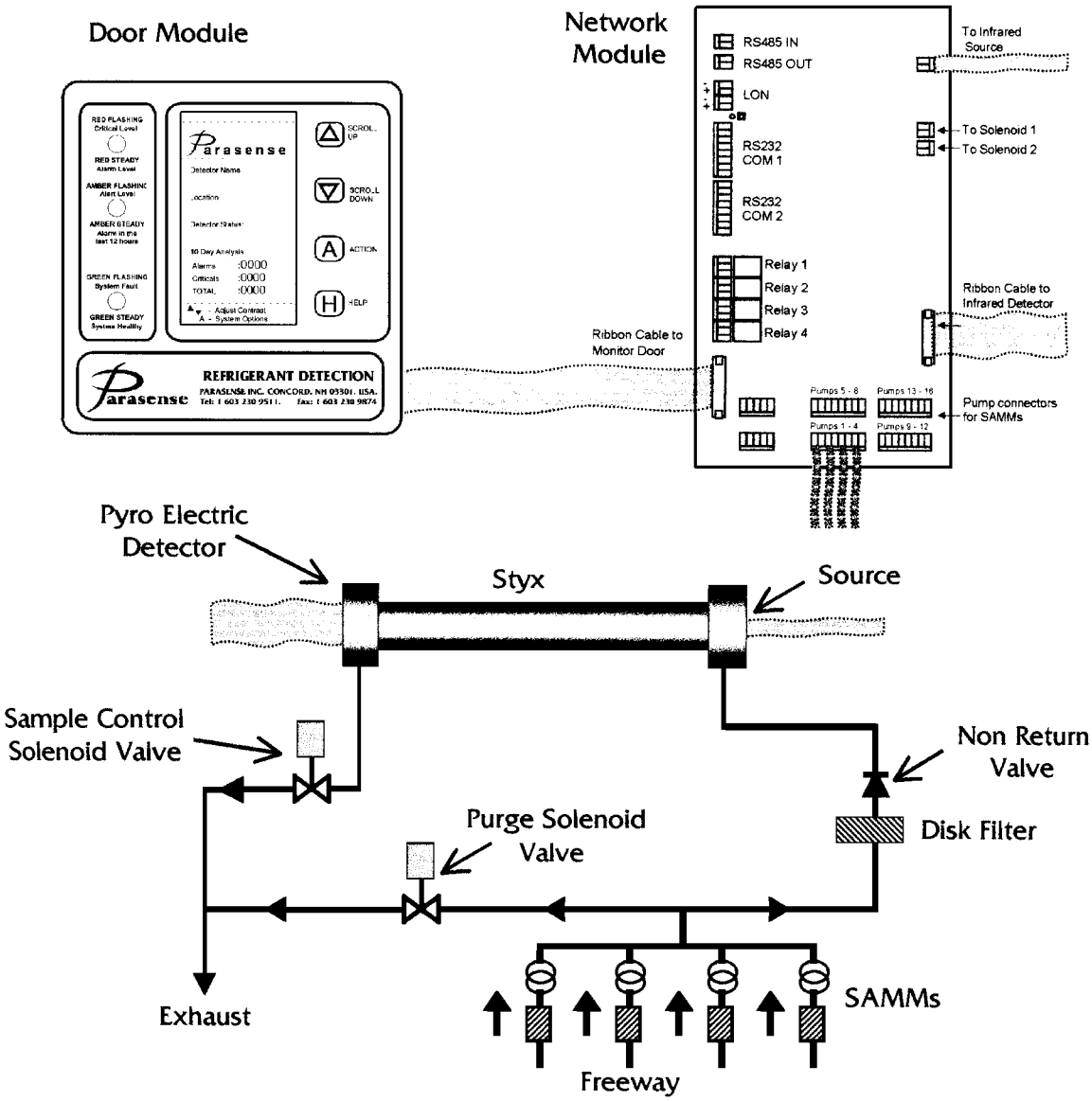

Figure 3-1. Sample Flow

Since most refrigerant is lost due to a large number of small leaks, spur kits are used to provide multiple sensing points. A spur kit consists of a manifold fitted with a number of sample pipes all terminated in foam filter assemblies. Spur kits are available with up to four sample pipes. The spur kits are used to specifically target multiple sources of leakage on a single installation or piece of equipment using one SAMM channel. Although freeway lengths will vary, all sample pipes associated with a common spur must be of equal length. Sample pipes associated with different spurs can be of different lengths. A typical example of spur kit usage is illustrated in figure 3-2.

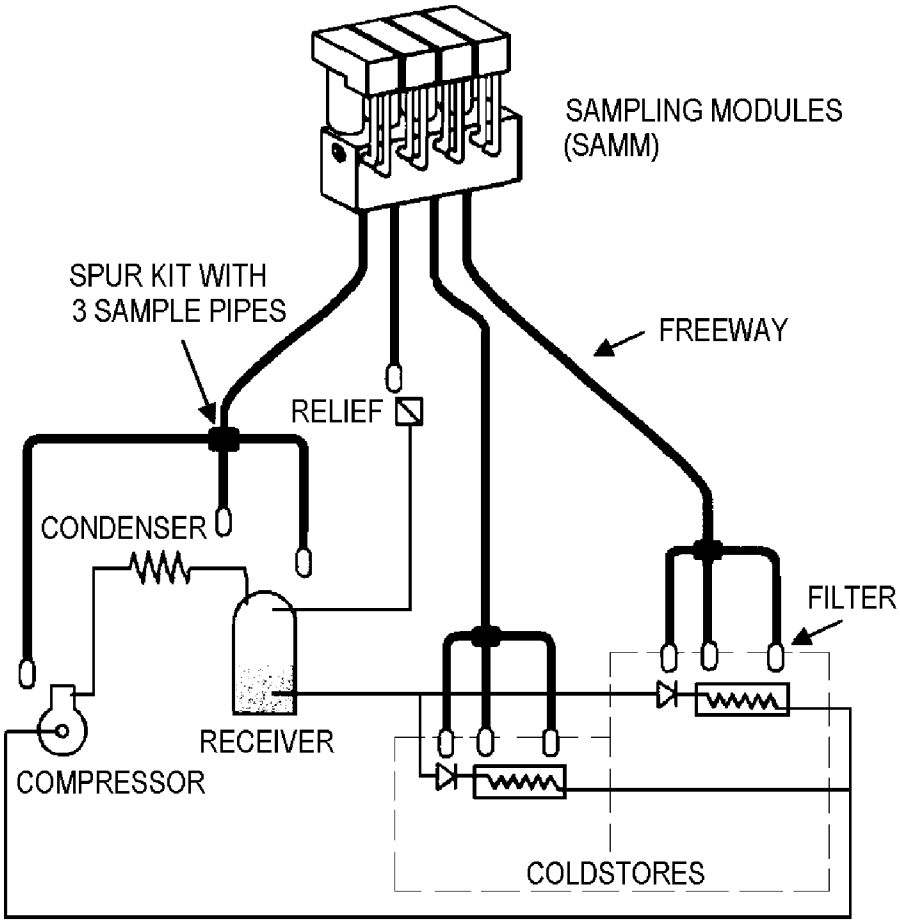

For illustrative purposes only. Sample pipes originating from a common spur are NOT shown equal in length.

Figure 3-2. Typical Spur Kit Arrangement

CHAPTER 4

SCHEDULED MAINTENANCE

4-1. INTRODUCTION

The Planned Maintenance System (PMS) provides required preventive maintenance procedures to be performed on a scheduled basis. OPNAVINST 4790.4 describes this system and covers departmental and work center record keeping, as well as the Maintenance Index Page (MIP) and Maintenance Requirement Cards (MRCs). MRCs include scheduled maintenance procedures for the equipment covered by this manual. The extensive and comprehensive scheduled maintenance provided by MRCs eliminates the need for any coverage within this chapter. Specific corrective maintenance (adjustment, alignment, and repair) is covered in Chapter 6.

CHAPTER 5

TROUBLESHOOTING

5-1. INTRODUCTION

This chapter discusses fault indications, fault messages, and operator actions. Specific corrective maintenance and component replacement procedures are covered in Chapter 6.

5-2. GENERAL

Proper care and maintenance will avoid most problems associated with the refrigerant monitor. Air filters should be periodically checked and replaced if obstructed. Recalibration of the SAMMs and styx module at regular intervals (normally 18 months) is essential in maintaining the high degree of accuracy required in detecting small refrigerant leaks.

5-3. PROBLEMS

5-3.1 LOSS OF POWER. This is usually indicated when none of the LEDs or the display screen are lit.

WARNING

Dangerous voltages are present. Use extreme caution when working in the vicinity of live electrical circuits.

CAUTION

This equipment contains components that are sensitive to electrostatic discharge. Refer to paragraph 1-3 for guidance when working on electrostatic discharge sensitive equipment.

a. Check incoming power and that the internal circuit breaker located on the power input module is in the ON position (see figure 1-1).

b. Ensure all terminal connections, including the ribbon cable between the monitor door and network module, are firmly connected.

c. Check for proper voltage out of the power input module (see figure 8-9). If unsatisfactory, replace the power input module.

d. Check for proper voltage out of the power supply module (see figure 8-9). If unsatisfactory, replace the power supply module (refer to paragraph 6-2.5). If voltage to the network module is satisfactory, the network module should be replaced (refer to paragraph 6-2.2).

e. Additional voltage readings supplied by the network module are provided in figure 8-9. If these readings are unsatisfactory, the network module should be replaced (refer to paragraph 6-2.2).

5-3.2 BLANK SCREEN. If the display screen is blank, but the green LED is lit, adjust the contrast using the SCROLL UP and SCROLL DOWN keys.

5-3.3 SYSTEM FAULT. If a system fault has occurred, as indicated by a flashing green LED on the traffic light display, use the ACTION key to view the SAMMs List. Scroll the arrow past each SAMM and note their status (i.e., Healthy, Purging, Sampling, or Fault Message displayed). For each fault, a visual check of all terminal connections, ribbon cables, and pneumatic hoses may isolate the problem. If necessary, refer to the following fault messages and procedures.

a. COMMS FAULT. This indicates a mismatch between the programmed configuration and the actual physical arrangement of the monitor itself. Verify the number of programmed SAMM channels is equal to or less than the actual number of SAMMs (i.e., 4 or 8). If more SAMMs are programmed than actually exist in the monitor, adjust the programming (refer to paragraph 2-7).

WARNING

Dangerous voltages are present. Use extreme caution when working in the vicinity of live electrical circuits.

CAUTION

This equipment contains components that are sensitive to electrostatic discharge. Refer to paragraph 1-3 for guidance when working on electrostatic discharge sensitive equipment.

b. INLET LEAK or OUTLET LEAK. An inlet leak may affect one or more SAMMs, whereas an outlet leak will affect all SAMMS. If either of these messages is shown for all SAMMs, the problem is in either the styx module or the network module. Verify circuitry associated with the network module is functioning properly as follows: See figure 6-3 for voltage measurement locations. While the monitor is operating, initiate a manual sample and open the door. Using a voltmeter on the network module terminals, verify that Solenoid 1 is energized (24 V = energized, 0 V = deenergized) for approximately 5 seconds at the end of the sample cycle, and that Solenoid 2 is energized for approximately 5 seconds following the freeway purging operation. If these readings are correct, the styx module should be replaced (refer to paragraph 6-2.4). If these readings are not correct, the network module should be replaced (refer to paragraph 6-2.2). If INLET LEAK is displayed for an individual SAMM, the cause is either in the SAMM itself, or a blocked freeway pipe. A blocked freeway pipe can be verified by taking a manual sample with the associated freeway pipe disconnected from the monitor. If the manual sample is successful, the fault condition will clear. Locate and remove the blockage, or kink, from the freeway and reconnect. If the fault remains, the SAMM should be replaced (refer to paragraph 6-2.3).

c. SOURCE FAULT. This indicates that the infrared source of the styx module is not operating properly; this will be indicated for all SAMMs. Using a voltmeter on the network module terminals, verify that 5 Vdc is available on the infrared source terminals (see figure 6-3 for voltage measurement locations). If the voltage is not correct, replace the network module (refer to paragraph 6-2.2 for network module replacement). If the voltage is correct, replace the styx module (refer to paragraph 6-2.4).

NOTE

The monitor door must be kept closed to maintain the correct operational temperature.

d. TOO COLD. This indicates that the styx module has not reached its minimum operating temperature (86°F). This may occur when the unit is first turned on and will clear when normal operating temperature is reached. If the fault does not clear, the styx module should be replaced (refer to paragraph 6-2.4).

e. TOO HOT. This indicates that the styx module is above its maximum operating temperature (140°F). This may be caused by an excessive ambient temperature or a failure of the network module. Correct the cause as appropriate.

f. CALIBRATION CHECK REQUIRED (older software versions) or SERVICE REQUIRED (newer software version). This message is displayed after 18 months of styx module operation. Although the system will continue to operate, it is the manufacturer's recommendation to replace the styx module at 18-month intervals. The fault can only be cleared by replacing the styx module. This message is also displayed if a value outside of the recommended level is entered during a calibration check (refer to paragraph 6-4).

g. Aux PSU FAULT. This message will appear if the auxiliary power supply on the network module has failed. Check for proper voltage on the auxiliary supply terminals (see figure 8-9). If these readings are unsatisfactory, the network module should be replaced (refer to paragraph 6-2.2). If these readings remain unsatisfactory after replacement of the network module, it may be necessary to replace the power supply module (refer to paragraph 6-2.5).

CHAPTER 6

CORRECTIVE MAINTENANCE

6-1. INTRODUCTION

There are no usable serviceable components within the Parasense 3300FSV-N refrigerant monitor. This chapter discusses corrective maintenance which includes component replacement, system tests, and calibration procedures. Special tools required during corrective maintenance, testing, and installation are provided in table 7-1

6-2. COMPONENT REPLACEMENT

6-2.1 ENCLOSURE DOOR. See figure 6-1.

WARNING

Prior to accomplishing corrective maintenance, open the circuit breaker to the refrigerant monitor and tag "DANGER, DO NOT OPERATE."

CAUTION

This equipment contains components that are sensitive to electrostatic discharge. Refer to paragraph 1-3 for guidance when working on electrostatic discharge sensitive equipment.

a. Open the door to the refrigerant monitor.

WARNING

Verify all circuits are deenergized, and all capacitors are discharged prior to accomplishing corrective maintenance.

b. Unplug the ribbon cable and disconnect the ground wire from the enclosure door.

c. If installed, remove the anti-lift peg located above the bottom hinge.

d. Remove the enclosure door.

e. Reinstall the enclosure door by accomplishing the previous steps in their reverse order.

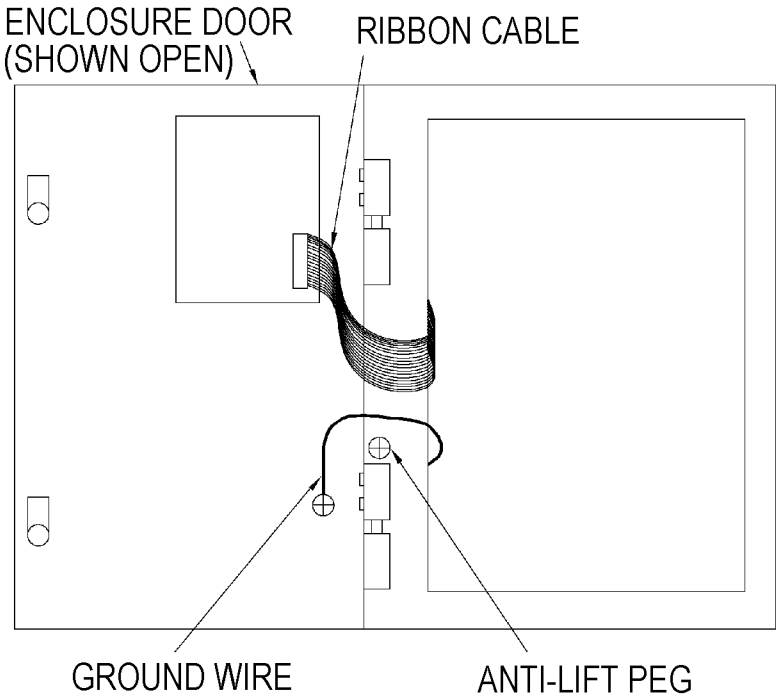

Figure 6-1. Monitor Door Replacement

6-2.2 NETWORK MODULE. The network module is attached to a mounting plate. See figure 6-2. To remove the network module, the mounting plate is removed with the network module attached.

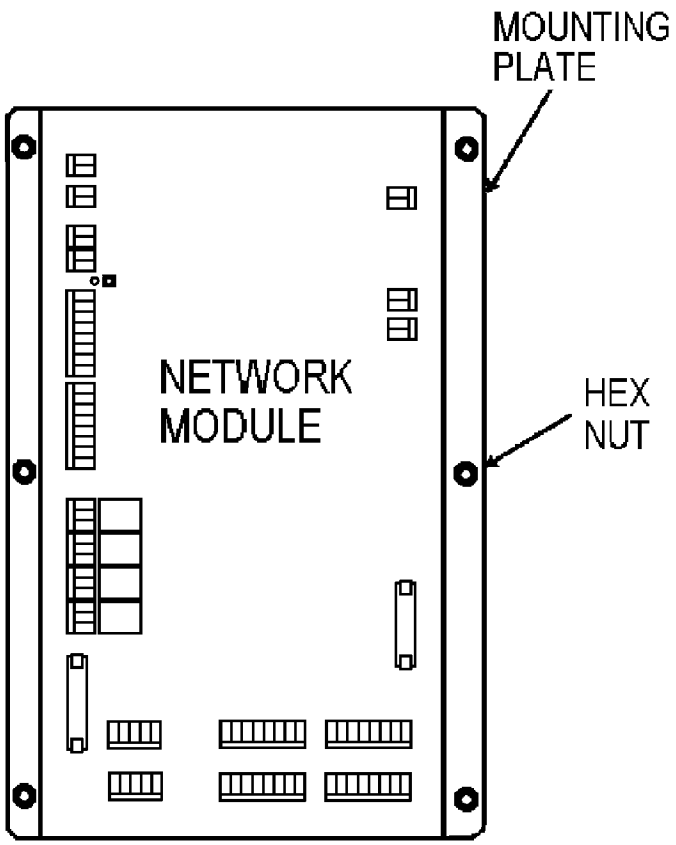

Figure 6-2. Network Module Mounting Plate

WARNING

Prior to accomplishing corrective maintenance, open the circuit breaker to the refrigerant monitor and tag "DANGER, DO NOT OPERATE."

CAUTION

This equipment contains components that are sensitive to electrostatic discharge. Refer to paragraph 1-3 for guidance when working on electrostatic discharge sensitive equipment.

a. Open the door to the refrigerant monitor. The network module is located in the upper center of the enclosure

WARNING

Verify all circuits are deenergized, and all capacitors are discharged prior to accomplishing corrective maintenance.

b. Disconnect the ground strap at the network module.

CAUTION

The position of all cables, wires, and hoses should be clearly identified prior to removal.

c. Disconnect all cables and wires from the network module that interconnect to other components. See figure 6-3.

d. Remove the six hex nuts and lockwashers from around the perimeter of the mounting plate. See figure 6-2.

e. Remove the mounting plate with network module attached. See figure 6-2.

f. Reinstall the network module by accomplishing the previous steps in their reverse order.

g. Following replacement of the network module, operational system data must be reentered. Refer to paragraph 2-7.

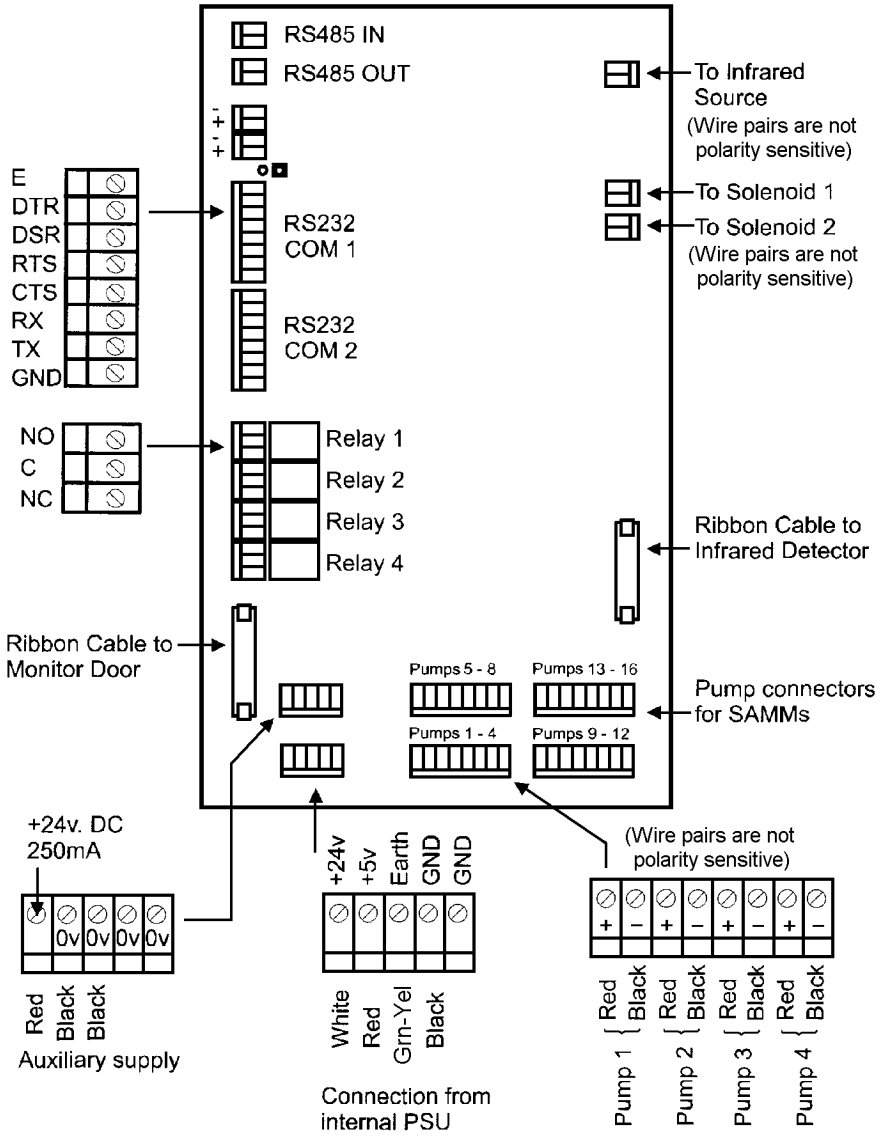

Figure 6-3. Network Module Wiring Removal

6-2.3 SAMPLING MODULE (SAMM).

WARNING

Prior to accomplishing corrective maintenance, open the circuit breaker to the refrigerant monitor and tag "DANGER, DO NOT OPERATE."

CAUTION

This equipment contains components that are sensitive to electrostatic discharge. Refer to paragraph 1-3 for guidance when working on electrostatic discharge sensitive equipment.

a. Open the door to the refrigerant monitor. The SAMMs are located on the bottom right-hand side of the enclosure. SAMMs can only be removed and replaced as a 4-channel module.

WARNING

Verify all circuits are deenergized, and all capacitors are discharged prior to accomplishing corrective maintenance.

CAUTION

The position of all cables, wires, and hoses should be clearly identified prior to removal.

b. Disconnect the SAMM wires from the network module (wire pairs from each SAMM are not polarity sensitive). See figure 6-4.

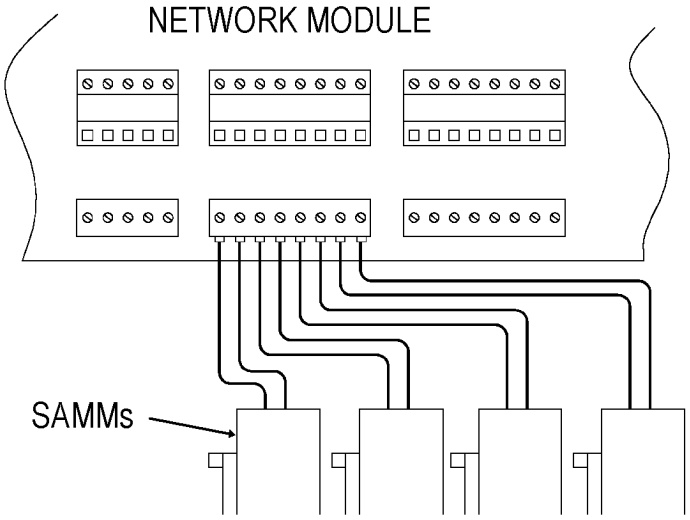

Figure 6-4. SAMM Wiring Removal

c. Disconnect the hose from the connector at the end of the SAMM. See figure 6-5.

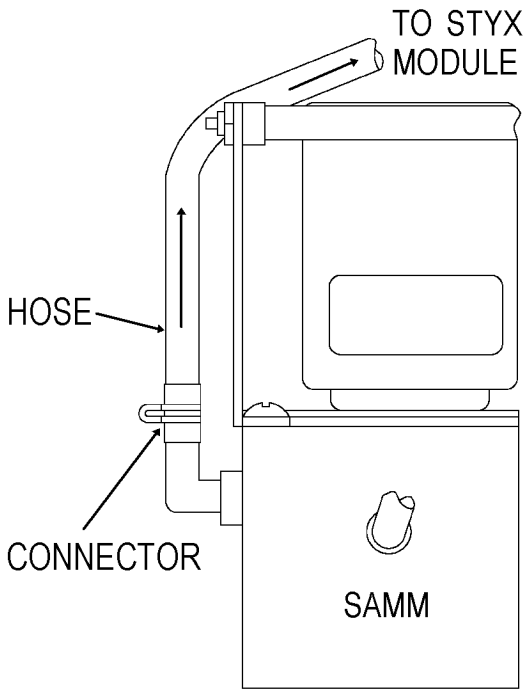

Figure 6-5. SAMM Air Hose Removal

d. Remove the four screws holding the SAMM to the bottom of the enclosure. See figure 6-6.

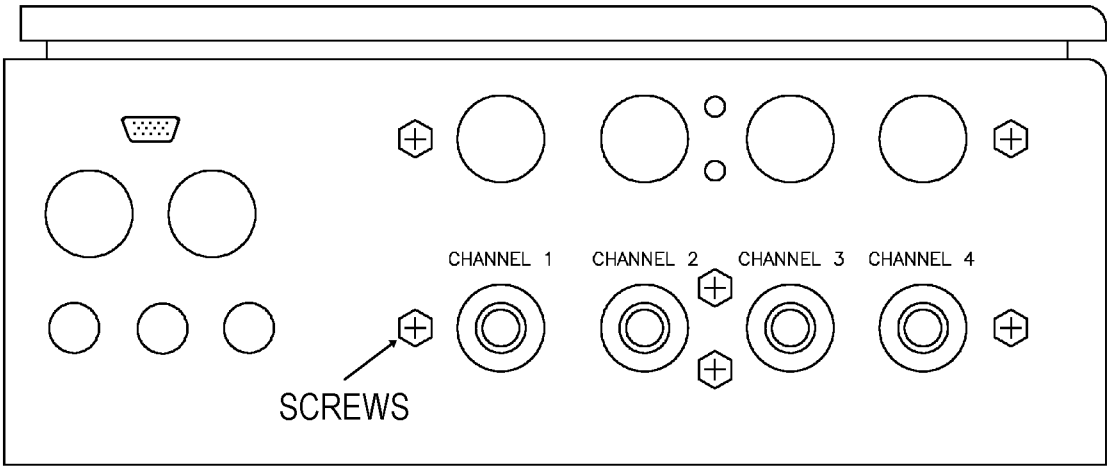

Figure 6-6. SAMM Removal (underside view of enclosure)

e. Remove the SAMM from the enclosure, being careful not to damage the gasket.

NOTE

New SAMMs are numbered 1-4. If a new SAMM is used for channels 5-8, connect the number one pump to the left-hand pair of terminals on the network module labeled PUMPS 5-8. SAMMs will only fit with their sampling pipes towards the front of the enclosure.

f. Reinstall the SAMM by accomplishing the previous steps in their reverse order.

6-2.4 STYX MODULE.

WARNING

Prior to accomplishing corrective maintenance, open the circuit breaker to the refrigerant monitor and tag "DANGER, DO NOT OPERATE."

CAUTION

This equipment contains components that are sensitive to electrostatic discharge. Refer to paragraph 1-3 for guidance when working on electrostatic discharge sensitive equipment.

a. Open the door to the refrigerant monitor. The styx module is located in the upper right-hand corner of the enclosure.

WARNING

Verify all circuits are deenergized, and all capacitors are discharged prior to accomplishing corrective maintenance.

CAUTION

The position of all cables, wires, and hoses should be clearly identified prior to removal.

b. Disconnect the ground wire from the styx module mounting plate. See figure 6-7.

c. Disconnect the associated ribbon cable and three wire assemblies from the network module (wire assemblies are not polarity sensitive).

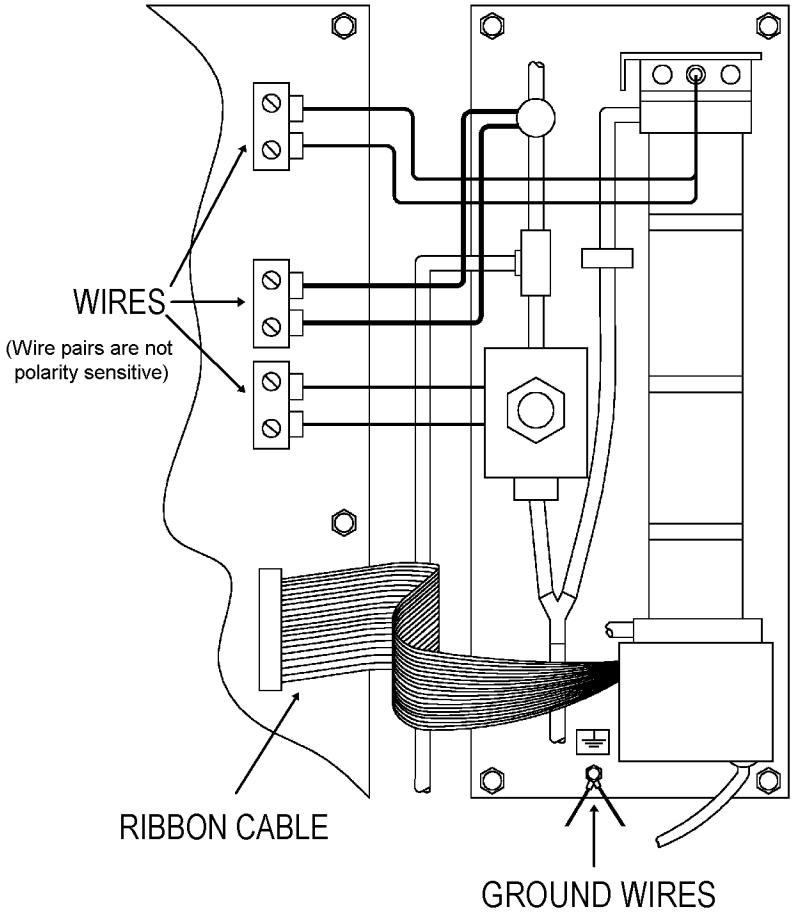

Figure 6-7. Styx Module Wiring Removal

d. Disconnect the air hoses from the SAMM and the air exhaust fitting. See figure 6-8.

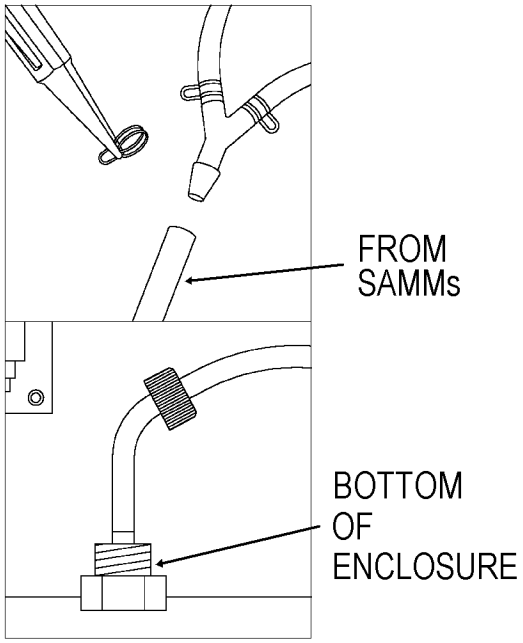

Figure 6-8. Styx Module Air Hose Removal

e. Remove the five hex nuts and lockwashers holding the styx module in position. See figure 6-9.

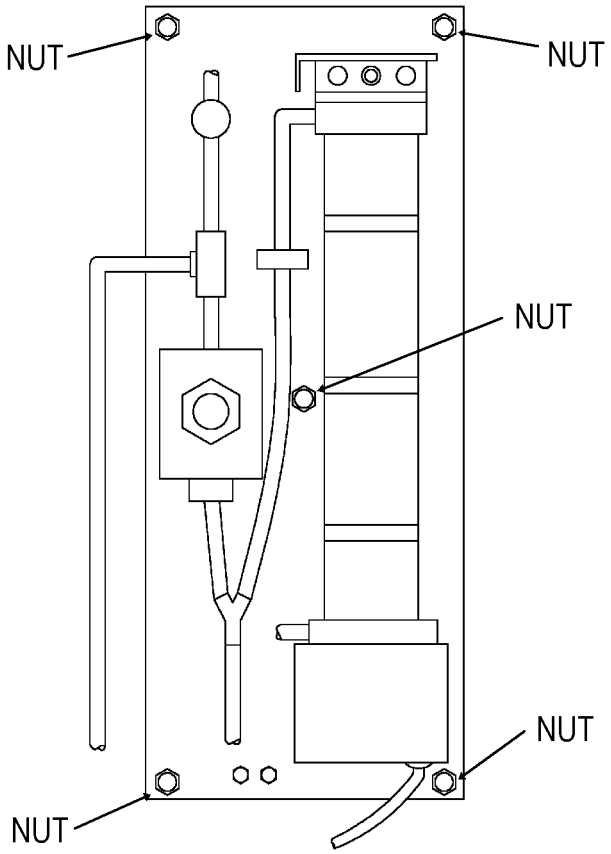

Figure 6-9. Styx Module Removal

f. Remove the styx module from the enclosure.

g. Reinstall the styx module by accomplishing the previous steps in their reverse order.

6-2.5 POWER SUPPLY MODULE. See figure 6-10.

WARNING

Prior to accomplishing corrective maintenance, open the circuit breaker to the refrigerant monitor and tag "DANGER, DO NOT OPERATE."

CAUTION

This equipment contains components that are sensitive to electrostatic discharge. Refer to paragraph 1-3 for guidance when working on electrostatic discharge sensitive equipment.

a. Open the door to the refrigerant monitor. The power supply module is located in the upper left-hand corner of the enclosure.

WARNING

Verify all circuits are deenergized, and all capacitors are discharged prior to accomplishing corrective maintenance.

CAUTION

The position of all cables, wires, and hoses should be clearly identified prior to removal.

b. Disconnect the ground wire from the power supply module.

c. Disconnect the associated wires from the power input module and the network module.

d. Remove the four self-locking hex nuts from around the edge of the power supply mounting plate.

e. Remove the power supply module from the enclosure.

f. Install the power supply module by accomplishing the previous steps in their reverse order.

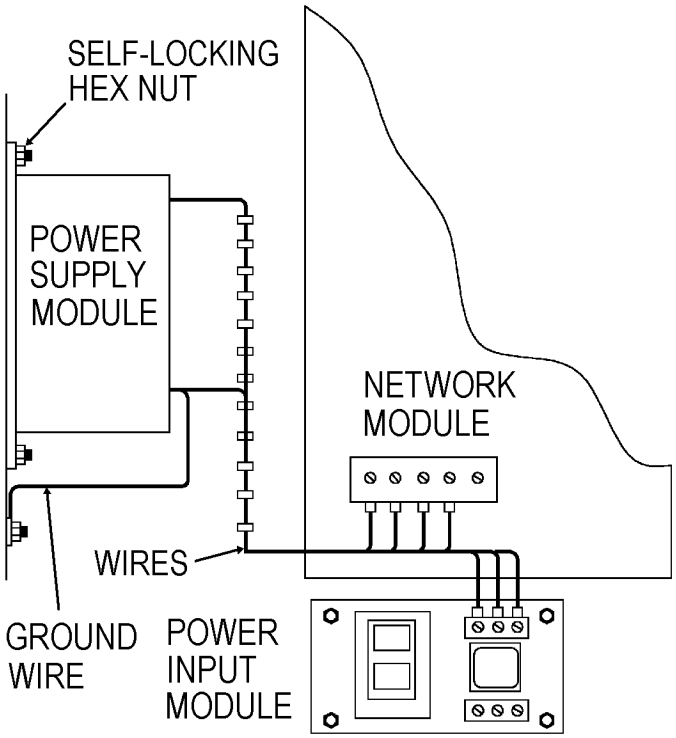

Figure 6-10. Power Supply Module Replacement

6-2.6 BEACON SOUNDER. Replacement of a remote beacon sounder, if installed, can be accomplished using the guidance of paragraph 8-4.

WARNING

Prior to accomplishing corrective maintenance, open the circuit breaker to the refrigerant monitor and tag "DANGER, DO NOT OPERATE."

CAUTION

This equipment contains components that are sensitive to electrostatic discharge. Refer to paragraph 1-3 for guidance when working on electrostatic discharge sensitive equipment.

a. Open the door to the refrigerant monitor.

WARNING

Verify all circuits are deenergized, and all capacitors are discharged prior to accomplishing corrective maintenance.

CAUTION

The position of all cables, wires, and hoses should be clearly identified prior to removal.

b. Disconnect the associated beacon sounder wires from the network module (see figure 8-8).

c. Remove the two fasteners from the underside of the beacon sounder.

d. Remove the beacon sounder from the enclosure.

e. Install the beacon sounder by accomplishing the previous steps in their reverse order.

6-3. TESTING

6-3.1 SYSTEM TEST. The system test is normally accomplished after initial system installation to verify the operation and functionality of the monitor, alarm relays, associated field wiring, and annunciators using the calibration gas provided. However, the system test should also be accomplished after any preventive or corrective maintenance. During a system test, the styx module is automatically reconfigured for the type of gas in the calibration gas cylinder (R134a) and the minimum purge time associated with the calibration gas sample tube and reservoir. A calibration check kit, consisting of a gas cylinder, reservoir, and hose, is required for this maintenance. See table 7-1 for ordering information.

a. Verify the monitor has been operating continuously for at least 4 hours with the enclosure door shut. This will ensure the system is at normal operating temperature (86-140°F). The enclosure door must remain shut during the system test.

b. Remove the plastic cap (not shown) from the calibration gas cylinder. See figure 6-11. Ensure the knurled knob on the cylinder valve is fully backed off (fully counterclockwise) and attach the valve to the gas cylinder.

CAUTION

Do not remove the brown knurled cap from the reservoir valve. Disassembly of the reservoir valve and loss of calibration gas will result.

c. Purge the calibration reservoir by turning the upper white section of the reservoir valve two turns counterclockwise. Expel as much air from the reservoir as possible. When the bag is emptied of air, shut the reservoir valve.

d. Connect the open end of the reservoir hose to the stem of the reservoir valve.

e. Insert the plug end of the reservoir hose into the socket of the cylinder valve.

f. Open the reservoir valve two turns (counterclockwise).

CAUTION

Do not overfill or allow any internal pressure to build within the reservoir as bursting may result. Overfilling can be avoided by not allowing the reservoir surface to become taut.

g. Slowly open the cylinder valve (clockwise) and carefully fill the calibration reservoir.

h. When the calibration reservoir is filled, shut the cylinder valve (counterclockwise).

i. Shut the reservoir valve (clockwise).

j. Disconnect the reservoir hose from the cylinder valve.

k. From the idle screen, use the SCROLL UP and SCROLL DOWN keys to highlight “Management” and press the ACTION key. Enter the correct passcode (see figure 2-15).

l. From the “Options” screen, select “System Test” followed by the ACTION key (see figure 2-16).

m. Using the pipe release tool, disconnect the freeway sampling pipe from SAMM channel 1 and insert the plug end of the reservoir hose.

n. Open the reservoir valve two turns (counterclockwise).

o. Select START followed by the ACTION key. A system test will commence, testing all SAMMs in sequential order, updating logs, and activating applicable relays. Any associated alarms will be activated if critical levels are reached.

p. Verify any associated alarms are activated. If the measured value for SAMM channel 1 is more than 5 percent above or below the ppm indicated on the calibration gas cylinder, a calibration check is recommended (see paragraph 6-4.1). The system will return to normal operation after all SAMMs have sampled once, or if STOP is selected followed by the ACTION key.

q. Remove the reservoir hose from the SAMM and reinsert the freeway sampling pipe.

r. Upon exiting the management section, the traffic light sequence will be updated to reflect the threshold reached. Any alarms will continue to be activated until the next sample has occurred and no refrigerant is detected or a lower threshold is reached. The system will automatically reset itself and continue the preconfigured sample routine.

6-3.2 AIR FLOW TEST. The air flow test verifies continuity of freeway piping and SAMM pump performance.

a. Using the pipe release tool, remove the freeway sampling pipe from SAMM channel 1 and insert the pipe into the LOWER port of the air flow gage.

b. Insert the pipe from the UPPER port of the air flow gage into SAMM channel 1.

c. Position the air flow gage in a vertical position on the monitor using the magnetic pad.

d. From the idle screen, use the SCROLL UP and SCROLL DOWN keys to highlight “Options” and press the ACTION key. From the “Options” menu, select “Samms List” followed by the ACTION KEY. Select SAMM 1 followed by the ACTION key (see figure 2-2 through figure 2-4).

e. Using the SCROLL UP and SCROLL DOWN keys, highlight “Start Sample” followed by the ACTION key (see figure 2-4). After completing any current programmed function, SAMM 1 will operate. The air flow gage should indicate approximately 2 liters per minute (lpm).

f. If the SAMM pump is running but air flow is less than 2 lpm, disconnect the freeway sampling pipe from the LOWER port of the air flow gage and repeat the test. If the gage now reads in excess of 3 lpm, check the freeway sampling pipe network for kinks or blockage. If the air flow remains below 2 lpm, replace the SAMM.

g. If the reading is satisfactory, disconnect the air flow gage from the SAMM and reconnect the freeway sampling pipe.

h. Repeat the test on the remaining SAMM channels.

6-4. CALIBRATION

Calibration is performed by replacing the styx module at intervals specified in PMS. After 18 months of styx module operation, a fault message will be displayed (refer to paragraph 5-3.3). If the styx module cannot be replaced due to ship's operational commitment, a calibration check should be performed. A calibration check kit, consisting of a gas cylinder, reservoir, and hose, is required for this maintenance. See table 7-1 for ordering information.

6-4.1 CALIBRATION CHECK. The purpose of the calibration check is to determine the need for styx module replacement, and allows the operator to compensate for any difference in readings.

a. Verify the monitor has been operating continuously for at least 4 hours with the enclosure door shut. This will ensure the system is at normal operating temperature (86-140°F). The enclosure door must remain shut during the calibration check.

b. Remove the plastic cap (not shown) from the calibration gas cylinder. Ensure the knurled knob on the cylinder valve is fully backed off (fully counterclockwise) and attach the valve to the gas cylinder.

CAUTION

Do not remove the brown knurled cap from the reservoir valve. Disassembly of the reservoir valve and loss of calibration gas will result.

c. Purge the calibration reservoir by turning the upper white section of the reservoir valve two turns counterclockwise. See figure 6-11. Expel as much air from the reservoir as possible. When the bag is emptied of air, shut the reservoir valve.

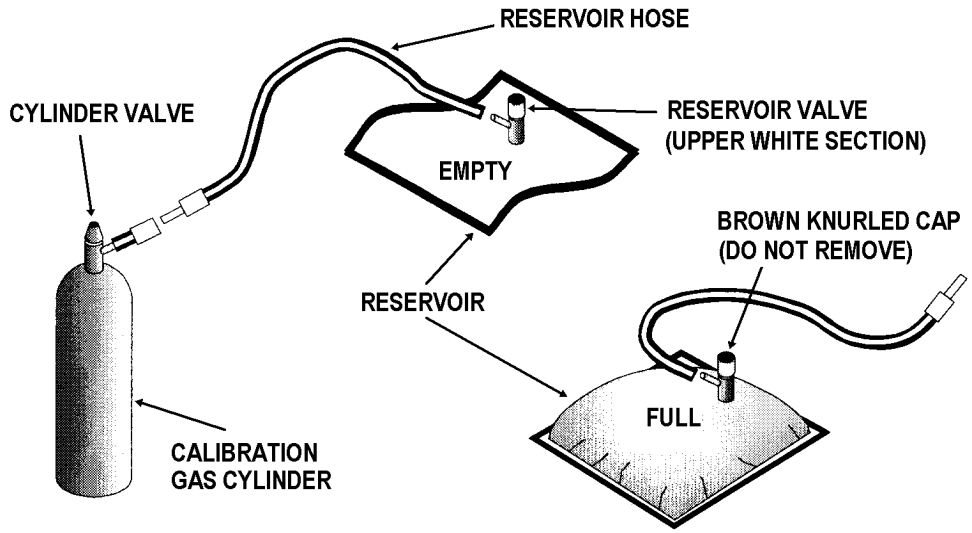

Figure 6-11. Calibration Gas Cylinder and Reservoir

d. Connect the open end of the reservoir hose to the stem of the reservoir valve.

e. Insert the plug end of the reservoir hose into the socket of the cylinder valve.

f. Open the reservoir valve two turns (counterclockwise).

CAUTION

Do not overfill or allow any internal pressure to build within the reservoir as bursting may result. Overfilling can be avoided by not allowing the reservoir surface to become taut.

g. Open the cylinder valve (clockwise) and carefully fill the calibration reservoir.

h. When the calibration reservoir is filled, shut the cylinder valve (counterclockwise).

i. Shut the reservoir valve (clockwise).

j. Disconnect the reservoir hose from the cylinder valve.

k. Verify SAMM 1 has just recently taken a normal sample. From the idle screen, use the SCROLL UP and SCROLL DOWN keys to highlight “Management” and press the ACTION key. Enter the correct passcode (see figure 2-15).

l. From the “Options” screen, select “Calibr. Check” followed by the ACTION key (see figure 2-16).

m. Using the SCROLL UP and SCROLL DOWN keys, move the cursor to “Cal. Gas Value” followed by the action key (see figure 2-32). Key in the appropriate ppm value provided with the calibration gas cylinder.

n. Using the pipe release tool, disconnect the freeway sampling pipe from SAMM channel 1 and insert the plug end of the reservoir hose.

o. Open the reservoir valve two turns (counterclockwise).

p. Select START followed by the ACTION key. A calibration check will commence and the measured value of the calibration gas will be displayed.

q. If the Cal. Gas Value entered in step m. is within 5 percent of the measured value, immediate calibration is not necessary. If the readings are within 15 percent of each other, calibration can be “Accepted” and the software will be adjusted to compensate for the new readings. If the readings differ by more than 15 percent, the styx module should be replaced as soon as possible. Accepting a reading in excess of 15 percent difference will cause a “System Fault” to be recorded and the words “Calibration Check Required” or “Service Required” (depending on software version) to appear in the SAMM status display screen.

r. Remove the reservoir hose from the SAMM and reinsert the freeway sampling pipe.

s. If the styx module has been operated for less than 18 months, the system fault light will clear and the “Cal. Gas Value” will return to the original setting when the next sample is taken.

CHAPTER 7

PARTS LIST

7-1. INTRODUCTION

Table 7-1 lists the special tools and materials required during corrective maintenance, testing, and installation. Table 7-2 lists the repair parts for the Parasense 3300FSV-N Refrigerant Monitor.

7-2. EXPLANATION OF COLUMNS

7-2.1 FIG & INDEX NO. This column provides, in numerical order, the figure and index number of each part shown on the corresponding illustration.

7-2.2 PART NO. This column provides the identifiers for all parts shown on the applicable figure. These numbers are obtained from engineering design drawings, manufacturer assembly drawings, vendor parts lists, and other source material. In every case, the number listed identifies the part in some way. When requesting replacement or repair parts, write each number exactly as listed to aid the supply department in procuring the part.

7-2.3 DESCRIPTION. This column provides descriptions of all parts shown on the applicable figure. Modifiers are included to identify the characteristics of a particular item. If available, National Stock Numbers (NSN) are also provided. The description column may include the entry “AP” which means the item is an attaching part of the previous item listed with a figure and index number.

7-2.4 COMMERCIAL AND GOVERNMENT ENTITY (CAGE). This column provides the CAGE Code identifying the manufacturer or supplier of the part. Paragraph 7-2.6 lists manufacturers’ codes, names, and addresses.

7-2.5 QUANTITY. This column contains one of the following entries: a number, indicating the quantity of the item at the indicated location only; or the abbreviation AR (as required), indicating the item is used in various quantity, size, or length.

Table 7-1. Special Tools and Materials

Part No.	Description	CAGE	Qty
5001*	Pipe Cutter, NSN 9Q 5110-463-2974	09WX1	1
5002*	Pipe Release Tool, NSN 9Q 5120-01-463-2975	09WX1	1
5004*	Monitor Door Key	09WX1	1
8205*	SE8000 Software for Windows ’95, ’98, Millenium, and XP	09WX1	1
8206*	SE8000 Software for Windows 2000, and NT	09WX1	1
8250*	Monitor Communication Leads	09WX1	1
8260*	Calibration Gas Cylinder	09WX1	1
8270*	Calibration Kit (Includes Calibration Gas Cylinder 8260)	09WX1	1
8275*	Flow Check Kit	09WX1	1
8280	Service Kit, NSN 1H 0099-LL-H55-3262	09WX1	1
84N2087	Ferrule, Wire, 14-20 AWG, Single Wire, 400 Piece Kit	1VZM8	AR
84N2092	Ferrule, Wire, 14-20 AWG, Twin Wire, 200 Piece Kit	1VZM8	AR
90B9535	Crimper, Ferrule, 12-22 AWG	1VZM8	1

*Included in Service Kit 8280.

Table 7-2. Parasense 3300FSV-N Refrigerant Monitor Parts List

Fig. & Index No.	Part No.	Description	CAGE	Qty Per Assy
7-1-0	3304 FSV-N	Refrigerant Monitor (4 Channel), NSN 7H 6665-LL-H55-9490	09WX1	1
7-1-0	3308 FSV-N	Refrigerant Monitor (8 Channel), NSN 7H 6665-LL-H55-9492	09WX1	1
1	9010/3300-8	Door Module, NSN 7H 5963-LL-H55-9485	09WX1	1
Not Shown	5077C	Door Bracket, AP	09WX1	2
2	9005/3300-8	Network Module, NSN 7H 5963-LL-H55-9486	09WX1	1
3	9005/3300-2	Styx Module, NSN 7H 5998-01-467-8342	09WX1	1
4	9003	SAMM Module, NSN 7H 5963-01-462-9254	09WX1	AR
5	9005/3300-3	Power Supply Module, NSN 1H 6130-LL-H55-9489	09WX1	1
6	9005/3300-4	Power Input Module, NSN 1H 5963-LL-H55-9491	09WX1	1
7	5073	Shock Isolator	09WX1	4
8	8510	Beacon Sounder, NSN 9G 6665-01-462-5973	09WX1	1
9	8545	Remote Beacon Sounder and Cage Assembly (8535), NSN 1H 6665-LL-H55-9479	09WX1	AR
10	8592	Pilot Relay, Kit, NSN 1H 5945-LL-H56-4031	09WX1	1
11	5350	Freeway Termination, 6mm, NSN 1H 4330-LL-H55-9488 (Pkg of 10) (Includes Filter and End Cap)	09WX1	AR
12	5050	Filter, Sample Pipe, with End Cap, NSN 9C 4330-01-460-5022 (Pkg of 50)	09WX1	AR
13	5320	Straight Connector, 6mm, (Pkg of 5)	09WX1	AR
14	5330	90 Degree Elbow, 6mm (Pkg of 5)	09WX1	AR
15	5092	Plug, Connector, Blanking, 6mm (Pkg of 5)	09WX1	AR
Not Shown	5601	1-Way Sample Pipe and Filter Assembly, Kit, NSN 1H 5998-LL-H55-9480	09WX1	AR
Not Shown	5602	2-Way Spur, Sample Pipes, Plug, and Filter Assemblies, Kit, NSN 1H 5998-LL-H55-9481	09WX1	AR
Not Shown	5603	3-Way Spur, Sample Pipes, and Filter Assemblies, Kit, NSN 1H 5998-LL-H55-9482	09WX1	AR
Not Shown	5604	4-Way Spur, Sample Pipes, and Filter Assemblies, Kit, NSN 1H 5998-LL-H55-9483	09WX1	AR
Not Shown	5080	Hardware Kit, Network or Styx Module Replacement	09WX1	AR
Not Shown	5081	Hardware Kit, Power Supply or Power Input Module Replacement	09WX1	AR
Not Shown	5082	Hardware Kit, SAMM Replacement (includes gasket)	09WX1	AR
Not Shown	5083	Hardware Kit, Enclosure Door Replacement	09WX1	AR
Not Shown	5084	Hardware Kit, Pilot Relay Replacement	09WX1	AR
Not Shown	50605/100	Freeway Pipe, Polyethylene, 6mm OD, 100 Ft. Lg.	09WX1	AR
Not Shown	50605/200	Freeway Pipe, Polyethylene, 6mm OD, 200 Ft. Lg., NSN 9C 4720-01-462-1941	09WX1	AR
Not Shown	50605/300	Freeway Pipe, Polyethylene, 6mm OD, 300 Ft. Lg.	09WX1	AR
Not Shown	5078	Mechanical Shock Kit (Includes Mounting Plate, Shock Isolators, and Door Brackets) (Optional)	09WX1	1
Not Shown	5510	Disc Filter, Styx, NSN 9C 4310-01-464-8527	09WX1	1
Not Shown	TBD	Caution Label, Monitor (See figure 8-5 for typical wording)	09WX1	1
Not Shown	TBD	Warning Label, Monitor (See figure 8-5 for typical wording)	09WX1	1
Not Shown	TBD	Identification and Warning Label, Remote Beacon Sounder (See figure 8-7 for typical wording)	09WX1	AR

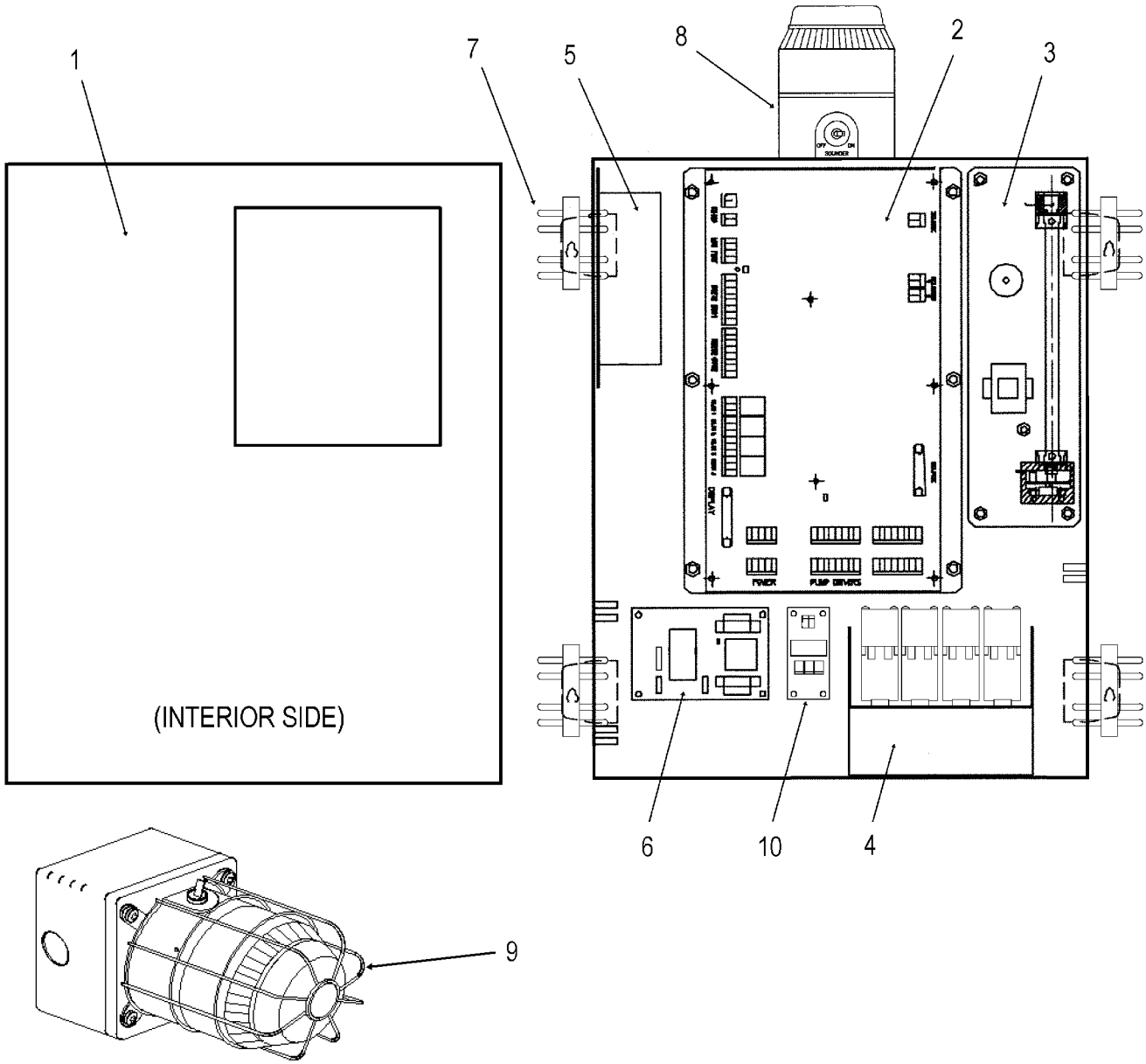

Figure 7-1. Parasense 3300FSV-N Refrigerant Monitor (Sheet 1 of 2)

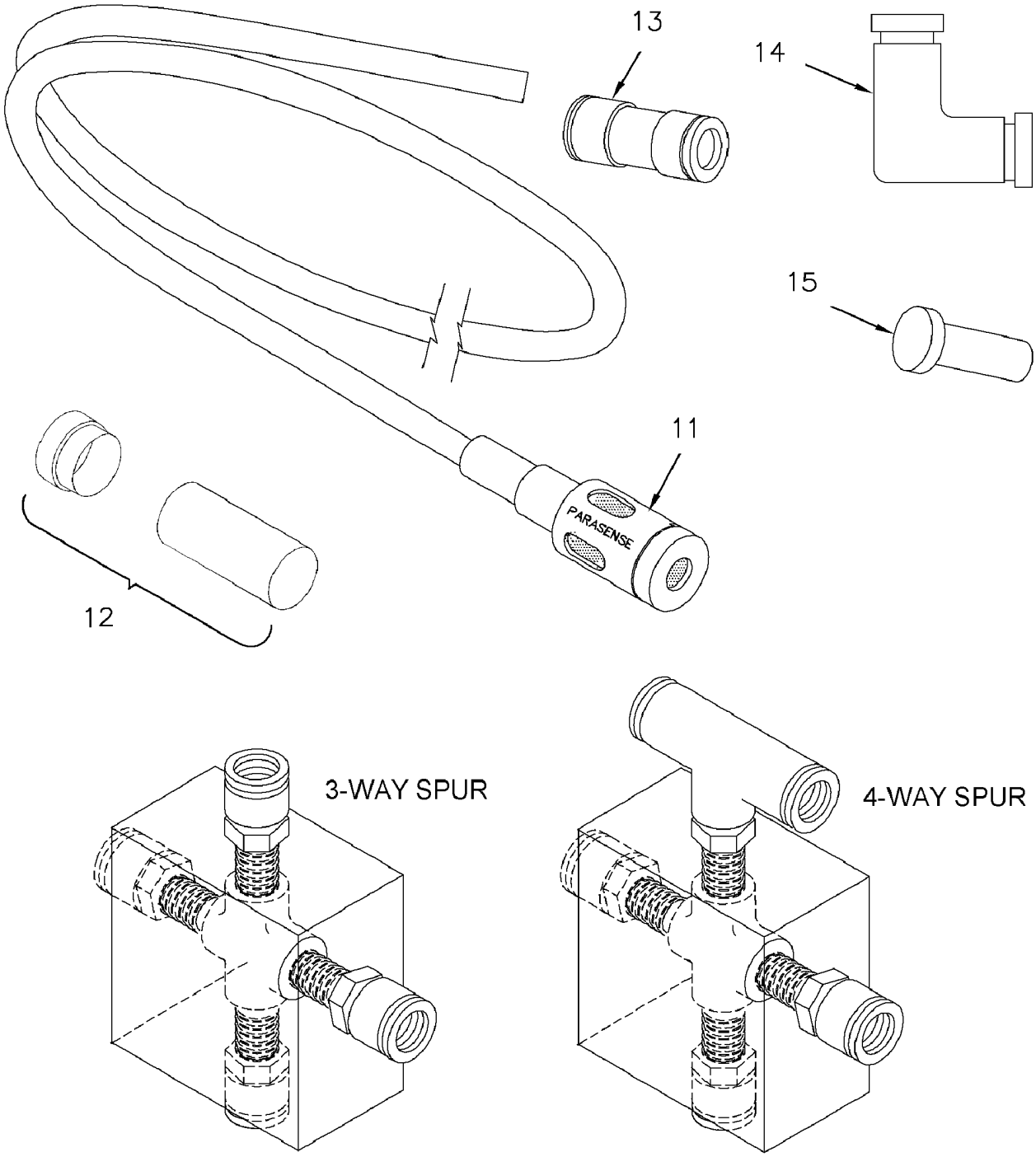

NOTE: A 2-WAY SPUR IS MADE BY USING PC. NO. 5
TO PLUG ONE OF THE PORTS OF A 3-WAY SPUR.

Figure 7-1. Parasense 3300FSV-N Refrigerant Monitor (Sheet 2 of 2)

7-2.6 LIST OF MANUFACTURERS.

CAGE	MANUFACTURER
09WX1	Parasense Inc. 58 Chenell Dr, Suite 1 Concord, NH 03301
1VZM8	Newark Electronics 6400 Rockside Rd Independence, OH 44131-2309

CHAPTER 8

INSTALLATION

8-1. PRELIMINARY

8-1.1 LOCATION. When determining a suitable location for mounting the enclosure, consider the following: environmental conditions; likely sources of refrigerant leakage; distance and number of desired sampling locations; minimum clearance requirements for the enclosure, mechanical shock isolators, and beacon sounder (see figure 8-1 through figure 8-3); availability of an adequate power source; visibility of beacon sounder with regards to compartment entry; and whether or not the use of sample piping bulkhead penetrators will be required (see figure 8-6).

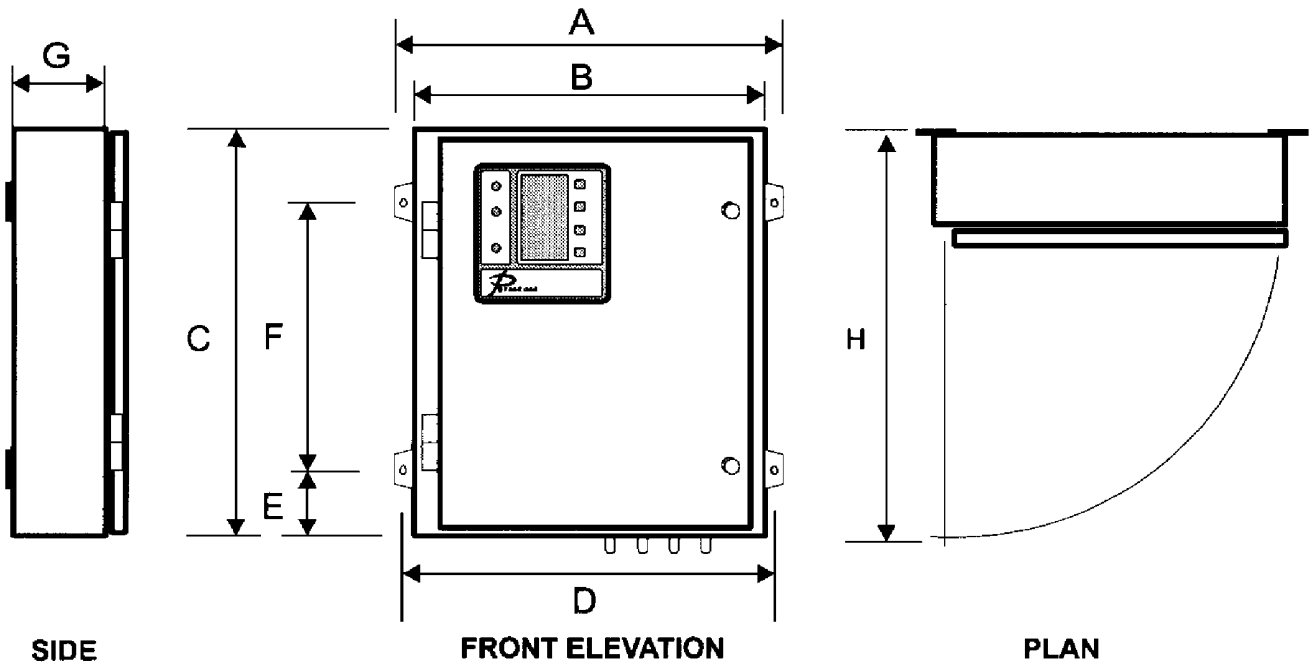

Model	A	B	C	D	E	F	G	H	Weight	
3301-3304										
Metric (mm)	450.00	400.00	500.00	434.00	70.00	360.00	150.00	530.00	14.0	kgs
Imperial (")	17.5	15.75	19.70	17.10	2.80	14.20	5.90	20.90	30.9	lbs
3305-3308										
Metric (mm)	450.00	400.00	500.00	434.00	70.00	360.00	150.00	530.00	15.5	kgs
Imperial (")	17.5	15.75	19.70	17.10	2.80	14.20	5.90	20.90	34.2	lbs

Figure 8-1. Refrigerant Monitor Enclosure Installation Clearances

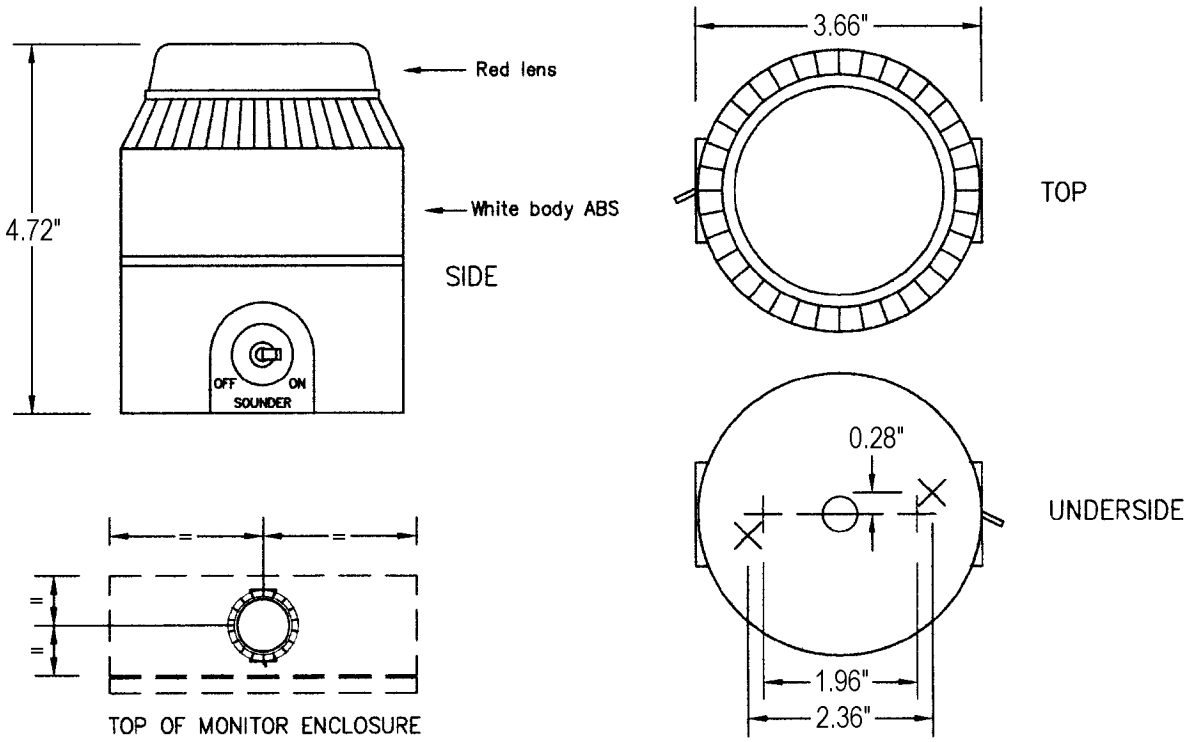

Figure 8-2. Beacon Sounder Installation Dimensions

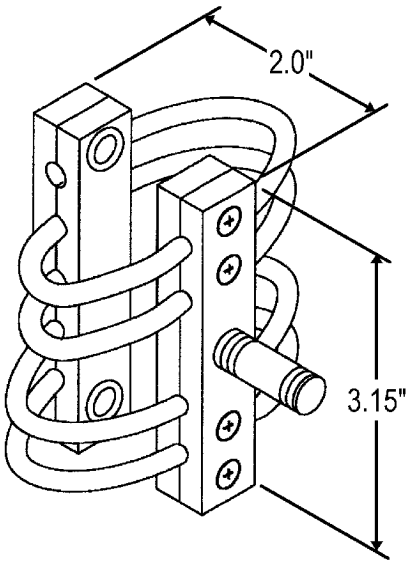

Figure 8-3. Shock Isolator Installation Dimensions

8-1.2 ELECTRICAL REQUIREMENTS. Each monitor requires an ungrounded, single-phase power source of 120 Vac, 60 Hz, protected by a 5 amp fuse or circuit breaker, connected as illustrated in figure 8-4. The monitor uses compression type terminal connections. As a result, any electrical connections to the monitor, using multiple stranded wire, should be made using the appropriate wire ferrules listed in table 7-1. If the ferrules are not available, tinning is considered to be an equivalent alternative.

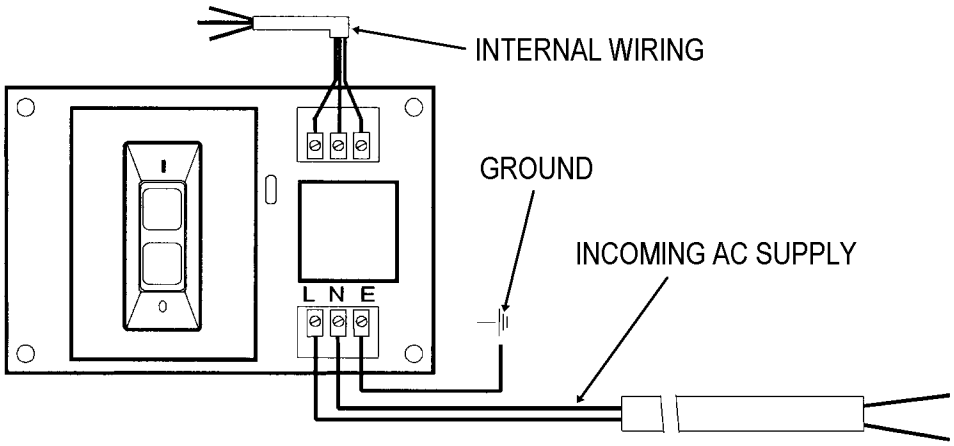

Figure 8-4. Incoming AC Supply Connections

8-2. ENCLOSURE MOUNTING

Mount the monitor on a solid vertical surface (i.e., bulkhead or frame) in a position where the LCD display can be easily accessed. Provide adequate space to allow opening of the door, and installation of sample piping and electrical wiring.

a. Attach the shock isolators to the desired location.

b. Mount the monitor enclosure with attached beacon sounder on the shock isolators.

CAUTION

Failure to provide a proper electrical ground for the enclosure may result in improper operation of the monitor.

c. Ground the enclosure to an unpainted surface of the ship's hull using the ground stud on the exterior of the monitor enclosure.

d. Attach the warning and caution labels to the front of the monitor. The warning and caution labels should read similar to figure 8-5.

WARNING

When a flashing red light is present on the traffic light display, or any beacon sounder is activated, exit the space immediately and notify supervisory personnel; do not reenter the space without appropriate breathing protection. When a steady red or yellow light is present on the traffic light display, immediately notify supervisory personnel; with proper ventilation, continued occupation of the space is allowed.

CAUTION

Prior to painting in this space, secure the monitor and tape over the sample filter ends to prevent contaminating the refrigerant monitoring system. The monitor may be secured while paint is drying to prevent unwanted alarms caused by sensitivity to certain paint solvents.

Figure 8-5. Monitor Warning and Caution Labels

8-3. SAMPLE PIPING INSTALLATION

In addition to the specific guidance provided in step a through step e, the following guidelines should be utilized when installing sample piping:

The flame retardant polyethylene tubing supplied by Parasense is the only NAVSEA approved tubing to be used when installing this equipment on board U.S. Navy vessels. Do not substitute other tubing without prior NAVSEA approval.

When cutting the sample piping, a square cut is required to ensure the sample pipes will seat and seal properly when inserted into the connectors on the SAMM and/or spur kit branches. The special pipe cutter, included in the service kit, should be used (see table 7-1 for ordering information).

Ensure the sample pipe filters are pointing downwards; this prevents moisture from collecting and being drawn into the SAMM.

To minimize head loss and flow restrictions, use continuous, unbroken lengths of freeway piping whenever possible. For extremely distant sample locations, one freeway-to-freeway connector is allowed.

Position the ends of sample piping as close as possible to potential leak locations.

Do not flatten or kink the sample piping.

Minimum bend radius for the sample piping is 6 inches.

Do not route the freeway piping from a warm space through a very cold space.

Do not route the sample piping through compartments or in contact with equipment where temperatures could exceed 140°F, or drop below -22°F.

Do not mix lengths of spur kit sample piping associated with a common freeway.

a. Using the appropriate appendix, determine the quantity and location of desired sampling points.

b. Route the freeway piping to the locations recommended in the appropriate appendix. In order to preserve the watertight integrity of decks and bulkheads, a special bulkhead/deck penetrator shall be used if the sample piping crosses the compartment boundary (see figure 8-6). Sample piping does not require special support

hangers or mounting brackets. Use of existing wireways, brackets, and hangers is allowed and recommended. Where applicable, sample piping should be tucked neatly behind existing cables and pipes to afford as much protection as possible.

CAUTION

All sample pipes branching from a common spur must be equal in length.

c. The use of spur manifolds can provide up to four possible sample points on a common freeway. Ensure the unused holes are sealed with the manufacturer's plugs provided. If a spur manifold is used, route the freeway to the spur manifold, and then route the individual sample pipes from the spur manifold to the sample points.

d. All sample piping may be secured using plastic tie-wraps.

CAUTION

Do not position the sample filters where they could become immersed in liquid of any kind.

e. Ensure freeway terminations and filters are attached to the ends of all sample piping.

LIST OF MATERIAL (QUANTITY FOR ONE BHD PENETRATION)

ITEM NO.	QTY	DESCRIPTION	NSN	P/N	CAGE	MATERIAL	REMARKS
1	1 EA	BULKHEAD FITTING, LOKRING	–	CS-BHP2-P04	0K091	CARBON STEEL	
2	1 FT	PIPE, 1/4 IPS	9C4710-00-277-4036	MIL-P-24691	81349	STAINLESS STEEL	.088 WALL
3	2 EA	ADAPTER, 3/8 NPT FEMALE X 3/8 MALE TUBE	–	H866-6-4-SS	99565	STAINLESS STEEL	
4	2 EA	VALVE, BALL	–	T0150-13	6F024	STAINLESS STEEL	APPR. FOR SHOCK AND VIBRATION BY NAVSEA LTR OPNC 03V23 SER:03V2/138 DTD 13 JUNE 1996
5	1 FT	TUBE, 3/8 INCH	9C4710-00-278-3269	MIL-T-8506	81349	STAINLESS STEEL	
6	2 EA	FEMALE CONNECTOR, 1/4 INCH TUBE X 1/4 NPT	–	SS-6-TSW-7-4	11649	STAINLESS STEEL	
7	2 EA	MALE CONNECTOR, 1/4 NPT X 6MM TUBE	–	3805-06-14	58755	STAINLESS STEEL	

REVISION HISTORY

ZONE	REV	DESCRIPTION	DATE	APPROVED
ALL	A	INCORPORATE PSNS COMMENTS IN DENNIS PIERCE EMAIL OF 20 FEB 2002 3:54 PM.	3/25/02	CM
A-3	B	IN NOTE 2 CHANGED T9074-AQ-GIB-010 TO T9074-AR-GIB-010/278.	5/28/02	CM

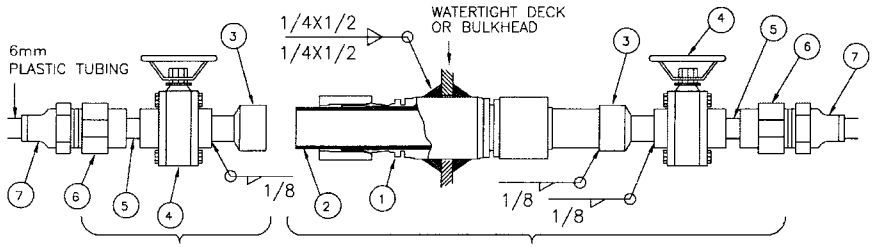

NOTES:

1. THIS DRAWING IS TO PROVIDE DETAILS OF A WATERTIGHT BULKHEAD/DECK PENETRATION FOR THE REFRIGERANT LEAK MONITORING SYSTEMS INSTALLED ON NON NUCLEAR SURFACE SHIPS BY MACHALT 516-66001 (ECP-559). THIS SYSTEM SAMPLES THE AIR IN SPACES WITH REFRIGERANT PIPING AND OPERATES AT NORMAL ATMOSPHERIC PRESSURE AND TEMPERATURE.
2. ALL WELDING TO BE IN ACCORDANCE WITH NAVSEA T9074-AR-GIB-010/278.
3. ALL BRAZING TO BE IN ACCORDANCE WITH NAVSEA 0900-LP-001-7000.
4. PIECES 2, 3, AND 4 TO BE WELDED. PIECES 4, 5, AND 6 TO BE BRAZED.
5. PIECE A TO BE PREFABRICATED AND CONSIST OF PIECE 6, 5, AND 4 BRAZED TOGETHER, PIECE 4 AND 3 WELDED TOGETHER.
6. PIECE B TO BE PREFABRICATED AND CONSIST OF PIECE 6, 5, AND 4 BRAZED TOGETHER, PIECE 4, 3, AND 2 WELDED TOGETHER
7. UPON SHIPBOARD INSTALLATION DRILL MAXIMUM 1-3/32 INCH HOLE IN WATERTIGHT DECK OR BULKHEAD AND WELD PIECE 1 ON BOTH SIDES AS SHOWN. THIS IS A TYPE P-17 WELD IN ACCORDANCE WITH MIL-STD-22.
8. INSERT PIECE B INTO PIECE 1 AND ATTACH USING LOKRING SHIPBOARD INSTALLATION PROCEDURE CATEGORY I UIPI NO. 0505-452A OF 27 SEPT 94.
9. WELD PIECE A TO PIECE B.
10. SCREW PIECE 7 INTO PIECE 6 USING TEFLON TAPE.
11. CONDUCT AN ALTERATION COMPLETION TEST OF WATERTIGHT BOUNDARY IN ACCORDANCE WITH NSTM 9086-CN-STM-040/079V4 PARAGRAPH 079-54.2.6 AIR HOSE METHOD TO VERIFY THAT AN INDIVIDUAL WELD AND FITTING IS TIGHT.

				REV
				SH
		B	REV	REV
		1	SH	STATUS

Q.E.D. SYSTEMS, INC.
4646 N. WITCHDUCK ROAD
VIRGINIA BEACH, VIRGINIA 23455
(757) 490-5000 PHONE
(757) 490-5027 FAX

CHECKED: SZB	DATE: 3/25/02
ENGINEER: CM	DATE: 3/25/02
APPROVAL: CM	DATE: 3/25/02

TITLE
MA 516-66001
PEN FOR WTRTT
DECK OR BHD

SIZE	CAGE CODE	DWG NO.	REV
B	7B572	MA559BHDPEN	B

SCALE: NONE
SHEET: 1 OF 1

Figure 8-6. Bulkhead/Deck Penetrator

8-4. REMOTE BEACON SOUNDER

If required, a separately mounted, remote beacon sounder can be activated by the monitor. This may be necessary in a large compartment to warn remote personnel of a refrigerant leak.

a. Determine location(s) for mounting remote beacon sounder(s). Maximum length of the interfacing cable between the monitor and the remote beacon sounder is 300 ft. See figure 8-7 for clearance dimensions.

b. Mount remote beacon sounder(s) with protective cage assembly.

c. Connect interfacing cable (300 ft. max. length) between remote beacon sounder(s) and refrigerant monitor. Remote beacon sounders are typically controlled by network module “Relay 2” or “Relay 3.” See figure 8-8 for electrical connections. Extra holes are provided in the bottom of the monitor enclosure for installation of additional cables.

d. Attach identification and warning label, illustrated in figure 8-7, to remote beacon sounder.

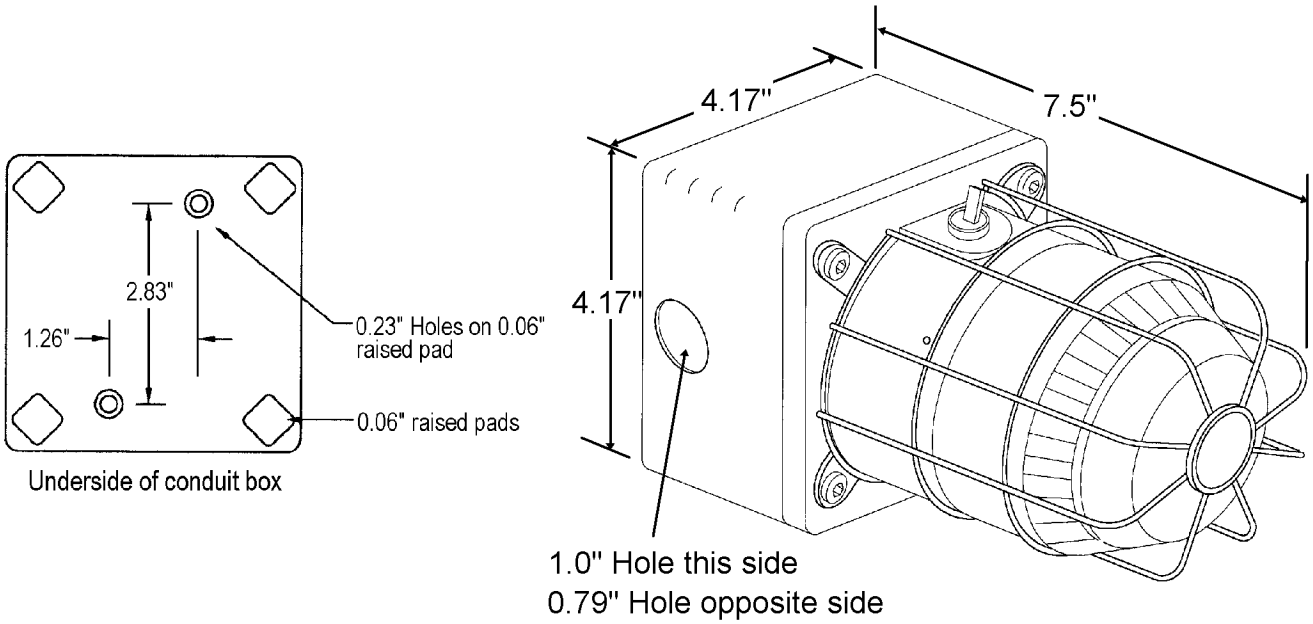

REMOTE BEACON SOUNDER

WARNING

When the remote beacon sounder is activated, exit the space immediately and notify supervisory personnel; do not reenter the space without appropriate breathing protection.

Identification and Warning Label

Figure 8-7. Remote Beacon Sounder

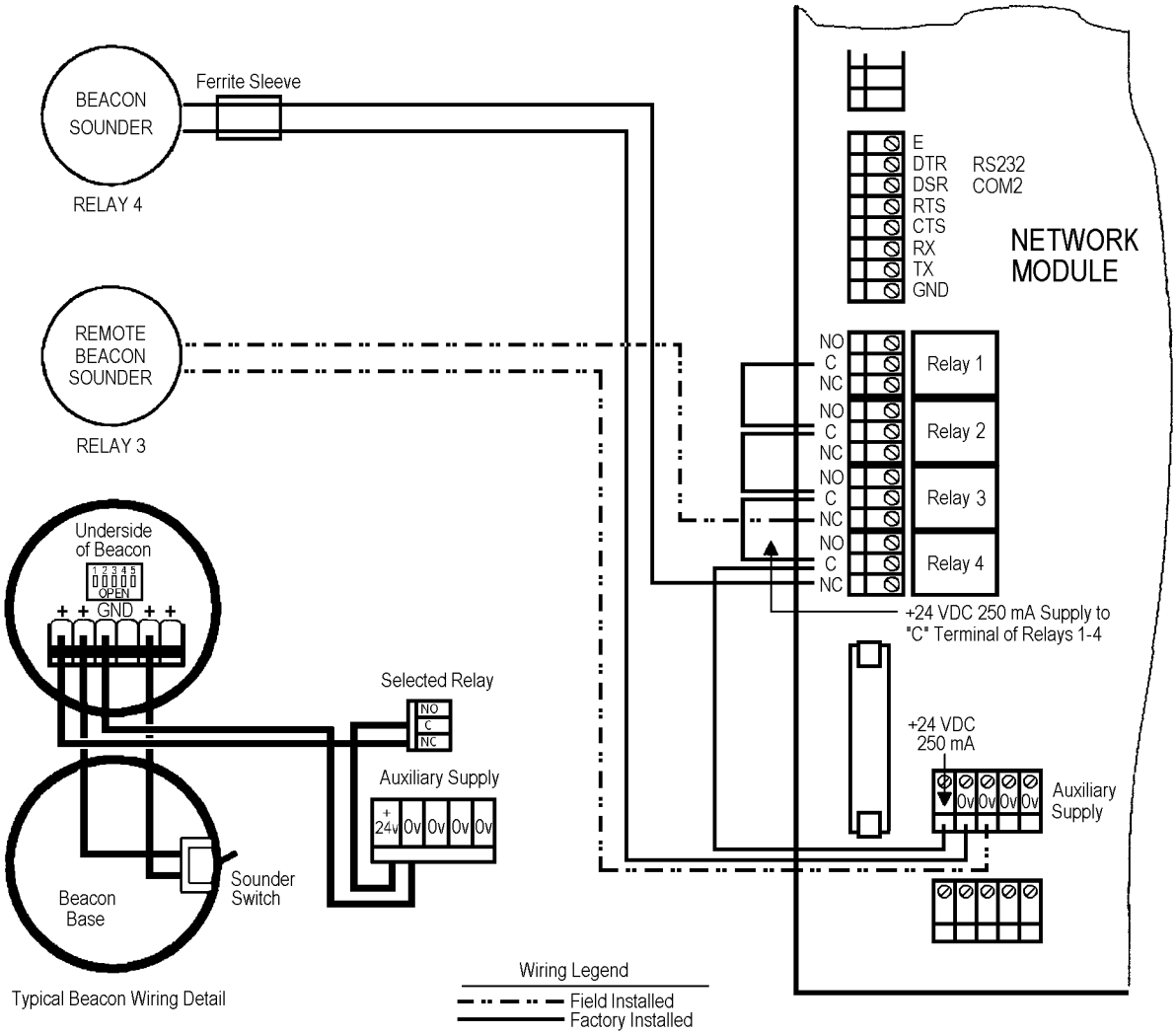

Figure 8-8. Typical Beacon Sounder Wiring Diagram

8-5. RELAY CONNECTIONS

8-5.1 NETWORK MODULE RELAYS. Four, identical, independent, configurable relays are provided on the network module. Contact voltage should not exceed 30 Vdc. Relays are energized when power is applied to the monitor, and deenergized during an alarm condition or when monitor power is removed. When a relay is energized, the common (C) terminal is connected to the normally open (NO) terminal. When a relay is deenergized, the common terminal is connected to the normally closed (NC) terminal. Typical examples of relay electrical connections are shown in figure 8-8 and figure 8-9.

8-5.2 PILOT RELAY. For shipboard applications, a pilot relay is installed adjacent to the power supply module. The pilot relay contacts are rated for 240 Vac, and are typically controlled by network module “Relay 1” and is used to energize an existing ship’s alarm while providing electrical separation between the circuits. A typical example of pilot relay electrical connections is shown in figure 8-9.

NOTE

Some ship’s alarm circuits require installation of a 6.8 Kohm resistor (not supplied by Parasense) across the C and NO terminals of the pilot relay. Refer to the

specific alarm circuit technical manual for guidance.

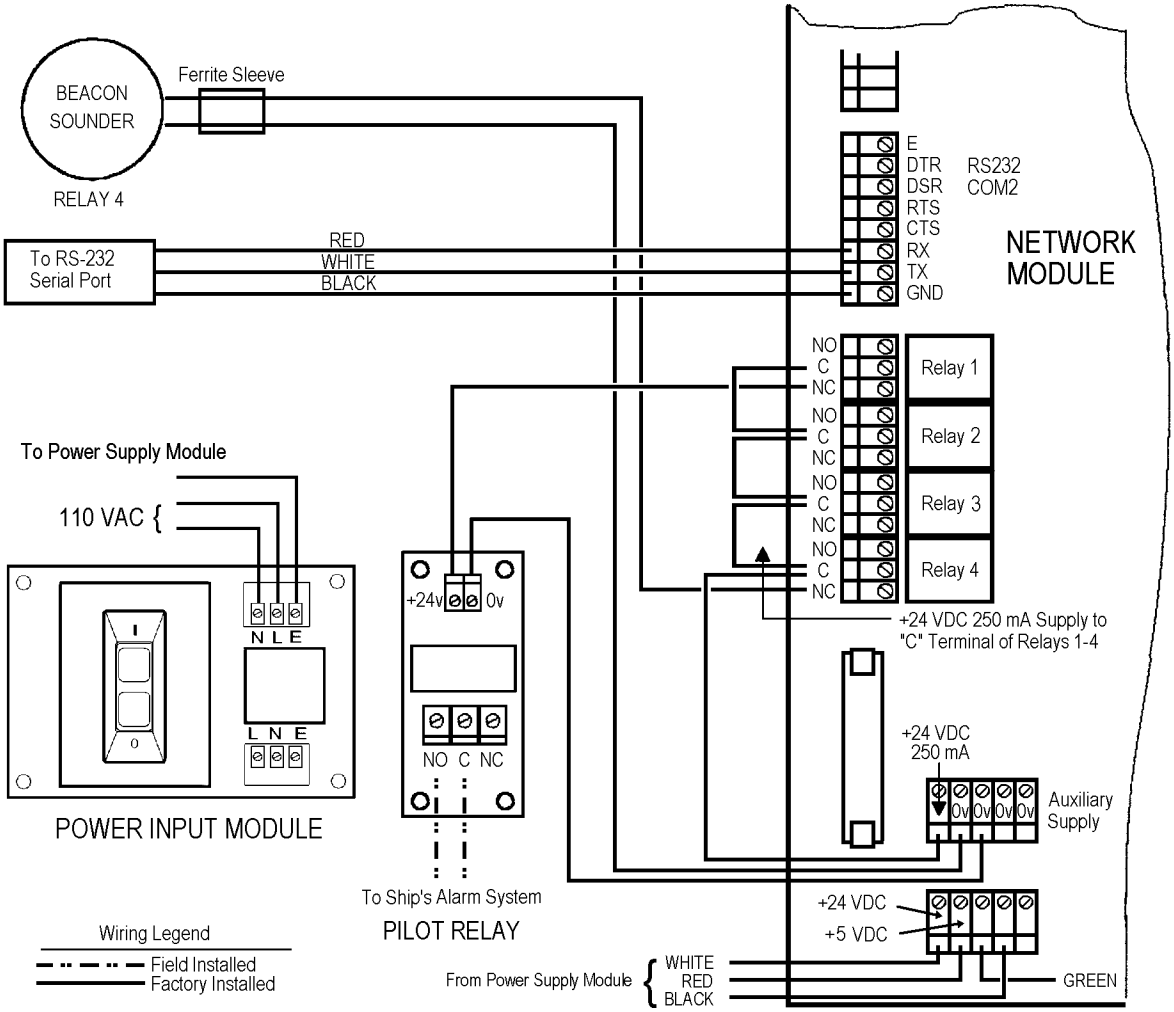

Figure 8-9. Typical Relay Electrical Connections

8-6. POST INSTALLATION CHECKS

Proper installation and operation can be verified by performing the following steps:

a. Verify the monitor has the correct number of SAMMs for the specific location.

b. Verify all wiring is correct and that all connections are tight.

c. Verify ground wire installed between the monitor and ship's hull.

d. Provide ship's power to the power input module and verify supply voltage is approximately 110 VAC, and that neither power lead is grounded.

e. Provide power to the monitor by positioning the power input module internal circuit breaker to the ON position (see figure 1-1). Observe the LCD display and verify the monitor successfully completes the 60-second self test (successful completion indicated by no flashing green light).

CAUTION

Changing the monitor configuration prior to completion of the self test could result in damage to the network module.

f. If provided, upload the appropriate configuration file into the monitor. Following upload, cycle power to the monitor to complete the transfer of information. If a configuration file is not available, program the monitor using the procedures of paragraph 2-7 and the appropriate appendix.

g. Verify SAMM channel names match the appropriate appendix, and that monitor setup is correct (i.e., detector name, date, turnover date, etc.)

h. Installing activity should add the ship specific management password. Verify functionality of the ship specific password by exiting the management, waiting at least 5 minutes, and reentering management mode using the ship specific management password.

NOTE

If the mode of any relay is configured to “group,” temporary changes to the monitor configuration will be necessary prior to conducting the initial system test of step j.

i. If applicable, ensure all relays will activate on a signal from SAMM channel 1 (see paragraph 2-7.6).

j. After the monitor has been energized for at least 2 hours, perform a system test in accordance with paragraph 6-3.1

k. Verify proper operation of all beacon sounders and any applicable ship’s alarms.

l. If any relays were reconfigured in step i. above, restore the ship specific relay configuration.

REAR SECTION

APPENDIX LIST

Appendix	Ship/Class
A	AGF 3
B	AGF 11
C1	AOE 1
C2	AOE 2 (Under Development)
C3	AOE 3 & 4
D	T-AOE 6 CLASS
E	ARS 50 CLASS
F	AS 39 CLASS
G	CG 47 CLASS
H1	CV 63
H2	CV 67
H3	CVN 65
H4	CVN 68 CLASS
I	DD 963 CLASS
J	DDG 51 CLASS
K	FFG 7 CLASS
L1	LCC 19
L2	LCC 20
M	LHA 1 CLASS
N	LHD 1 CLASS
O	LPD 4 CLASS
P1	LSD 36 CLASS
P2	LSD 41-43
P3	LSD 44-48
P4	LSD 49 CLASS
Specific ship or class configuration data is based on initial shipcheck data and will not be updated.	

APPENDIX A

(AGF 3)

A-1. AC PLANTS NO. 1, 2, 3, 4

RELAY DETAILS

Parameter	**Relay 1**	**Relay 2**	**Relay 3**	**Relay 4**
Operation	Continuous	Continuous	Continuous	Continuous
Mode	System	System	System	System
Logic	Any One	Any One	Any One	Any One
Pulse (m)	03	03	03	03
Inhibit (h)	00	00	00	00
Day Time (h)	06	06	06	06
Day Factor	2.8	2.8	2.8	2.8
Night Time (h)	18	18	18	18
Night Factor	2.8	2.8	2.8	2.8
SAMM 01	X	X	X	X
SAMM 02	X	X	X	X
SAMM 03	X	X	X	X
SAMM 04	X	X	X	X
SAMM 05	X	X	X	X
SAMM 06	X	X	X	X
SAMM 07	X	X	X	X
SAMM 08	X	X	X	X

SAMM DETAILS

Address	**Name**	**Alert**	**Alarm**	**Critical**	**Refrigerant**	**Cycle Time (mins)**	**Pipe Length (ft)**
01	NO. 1 AC COMP	0050	0300	0850	R134A	010	0100
02	NO. 1 AC COND UNIT	0050	0300	0850	R134A	010	0100
03	NO. 2 AC COMP	0050	0300	0850	R134A	010	0100
04	NO. 2 AC COND UNIT	0050	0300	0850	R134A	010	0100
05	NO. 3 AC COMP	0050	0300	0850	R134A	010	0100
06	NO. 3 AC COND UNIT	0050	0300	0850	R134A	010	0100
07	NO. 4 AC COMP	0050	0300	0850	R134A	010	0100
08	NO. 4 AC COND UNIT	0050	0300	0850	R134A	010	0100

Recommended Sampling Locations for AC PLANTS NO. 1, 2, 3, 4

SAMM	Name	Sampling Locations
01	NO. 1 AC COMP	1. Shaft Seal 2. Suction Shutoff Valve 3. Compressor Pump End 4. Gage Board
02	NO. 1 AC COND UNIT	1. Filter/Drier 2. TXV 3. Chiller, 9” above deck 4. CWCV
03	NO. 2 AC COMP	1. Shaft Seal 2. Suction Shutoff Valve 3. Compressor Pump End 4. Gage Board
04	NO. 2 AC COND UNIT	1. Filter/Drier 2. TXV 3. Chiller, 9” above deck 4. CWCV
05	NO. 3 AC COMP	1. Shaft Seal 2. Suction Shutoff Valve 3. Compressor Pump End 4. Gage Board
06	NO. 3 AC COND UNIT	1. Filter/Drier 2. TXV 3. Chiller, 9” above deck 4. CWCV
07	NO. 4 AC COMP	1. Shaft Seal 2. Suction Shutoff Valve 3. Compressor Pump End 4. Gage Board
08	NO. 4 AC COND UNIT	1. Filter/Drier 2. TXV 3. Chiller, 9” above deck 4. CWCV

A-2. AC PLANTS NO. 5 & 6

RELAY DETAILS

Parameter	Relay 1	Relay 2	Relay 3	Relay 4
Operation	Continuous	Continuous	Continuous	Continuous
Mode	System	System	System	System
Logic	Any One	Any One	Any One	Any One
Pulse (m)	03	03	03	03
Inhibit (h)	00	00	00	00
Day Time (h)	06	06	06	06
Day Factor	2.8	2.8	2.8	2.8
Night Time (h)	18	18	18	18
Night Factor	2.8	2.8	2.8	2.8
SAMM 01	X	X	X	X
SAMM 02	X	X	X	X
SAMM 03	X	X	X	X
SAMM 04	X	X	X	X

SAMM DETAILS

Address	Name	Alert	Alarm	Critical	Refrigerant	Cycle Time (mins)	Pipe Length (ft)
01	NO. 5 AC COMP	0050	0300	0850	R134A	010	0100
02	NO. 5 AC COND UNIT	0050	0300	0850	R134A	010	0100
03	NO. 6 AC COMP	0050	0300	0850	R134A	010	0100
04	NO. 6 AC COND UNIT	0050	0300	0850	R134A	010	0100

Recommended Sampling Locations for AC PLANTS NO. 5 & 6

SAMM	Name	Sampling Locations
01	NO. 5 AC COMP	1. Shaft Seal 2. Suction Shutoff Valve 3. Compressor Pump End 4. Gage Board
02	NO. 5 AC COND UNIT	1. Filter/Drier 2. TXV 3. Chiller, 9” above deck 4. CWCV
03	NO. 6 AC COMP	1. Shaft Seal 2. Suction Shutoff Valve 3. Compressor Pump End 4. Gage Board
04	NO. 6 AC COND UNIT	1. Filter/Drier 2. TXV 3. Chiller, 9” above deck 4. CWCV

A-3. AC PLANTS NO. 7 & 8

RELAY DETAILS

Parameter	Relay 1	Relay 2	Relay 3	Relay 4
Operation	Continuous	Continuous	Continuous	Continuous
Mode	System	System	System	System
Logic	Any One	Any One	Any One	Any One
Pulse (m)	03	03	03	03
Inhibit (h)	00	00	00	00
Day Time (h)	06	06	06	06
Day Factor	2.8	2.8	2.8	2.8
Night Time (h)	18	18	18	18
Night Factor	2.8	2.8	2.8	2.8
SAMM 01	X	X	X	X
SAMM 02	X	X	X	X
SAMM 03	X	X	X	X
SAMM 04	X	X	X	X

SAMM DETAILS

Address	Name	Alert	Alarm	Critical	Refrigerant	Cycle Time (mins)	Pipe Length (ft)
01	NO. 7 AC PLANT	0050	0300	0850	R114 or R236FA	010	0100
02	NO. 8 AC PLANT	0050	0300	0850	R114 or R236FA	010	0100
03	PPU	0050	0300	0850	R114 or R236FA	010	0100
04	NO. 7 & 8 CWCV	0050	0300	0850	R114 or R236FA	010	0100

Recommended Sampling Locations for AC PLANTS NO. 7 & 8

SAMM	Name	Sampling Locations
01	NO. 7 AC PLANT	1. Refrigerant Test Connections 2. Hot Gas Bypass Valve 3. Near Bottom of Chiller 4. Filter Isolation Valves
02	NO. 8 AC PLANT	1. Refrigerant Test Connections 2. Hot Gas Bypass Valve 3. Near Bottom of Chiller 4. Filter Isolation Valves
03	PPU	1. Crossover Valves 2. Below Pump 3. Below Suction Valves 4. Below Collection Tank
04	NO. 7 & 8 CWCV	1. CWCV No. 7 2. CWCV No. 8

A-4. AC PLANTS NO. 9 & 10

RELAY DETAILS

Parameter	Relay 1	Relay 2	Relay 3	Relay 4
Operation	Continuous	Continuous	Continuous	Continuous
Mode	System	System	System	System
Logic	Any One	Any One	Any One	Any One
Pulse (m)	03	03	03	03
Inhibit (h)	00	00	00	00
Day Time (h)	06	06	06	06
Day Factor	2.8	2.8	2.8	2.8
Night Time (h)	18	18	18	18
Night Factor	2.8	2.8	2.8	2.8
SAMM 01	X	X	X	X
SAMM 02	X	X	X	X
SAMM 03	X	X	X	X
SAMM 04	X	X	X	X

SAMM DETAILS

Address	Name	Alert	Alarm	Critical	Refrigerant	Cycle Time (mins)	Pipe Length (ft)
01	NO. 9 AC PLANT	0050	0300	0850	R114	010	0100
02	NO. 10 AC PLANT	0050	0300	0850	R114 or R236FA	010	0100
03	PPU	0050	0300	0850	R114 or R236FA	010	0100
04	NO. 9 & 10 CWCV	0050	0300	0850	R114 or R236FA	010	0100

Recommended Sampling Locations for AC PLANTS NO. 9 & 10

SAMM	Name	Sampling Locations
01	NO. 9 AC PLANT	1. Refrigerant Test Connections 2. Hot Gas Bypass Valve 3. Near Bottom of Chiller 4. Filter Isolation Valves
02	NO. 10 AC PLANT	1. Refrigerant Test Connections 2. Hot Gas Bypass Valve 3. Near Bottom of Chiller 4. Filter Isolation Valves
03	PPU	1. Crossover Valves 2. Below Pump 3. Below Suction Valves 4. Below Collection Tank
04	NO. 9 & 10 CWCV	1. CWCV No. 9 2. CWCV No. 10

A-5. REFR PLANTS NO. 1 & 2

RELAY DETAILS

Parameter	Relay 1	Relay 2	Relay 3	Relay 4
Operation	Continuous	Continuous	Continuous	Continuous
Mode	System	System	System	System
Logic	Any One	Any One	Any One	Any One
Pulse (m)	03	03	03	03
Inhibit (h)	00	00	00	00
Day Time (h)	06	06	06	06
Day Factor	2.8	2.8	2.8	2.8
Night Time (h)	18	18	18	18
Night Factor	2.8	2.8	2.8	2.8
SAMM 01	X	X	X	X
SAMM 02	X	X	X	X
SAMM 03	X	X	X	X
SAMM 04	X	X	X	X

SAMM DETAILS

Address	Name	Alert	Alarm	Critical	Refrigerant	Cycle Time (mins)	Pipe Length (ft)
01	NO. 1 REFR COMP	0050	0300	0850	R12 or R134A	010	0100
02	NO. 1 REFR COND UNIT	0050	0300	0850	R12 or R134A	010	0100
03	NO. 2 REFR COMP	0050	0300	0850	R12 or R134A	010	0100
04	NO. 2 REFR COND UNIT	0050	0300	0850	R12 or R134A	010	0100

Recommended Sampling Locations for REFR PLANTS NO. 1 & 2

SAMM	Name	Sampling Locations
01	NO. 1 REFR COMP	1. Shaft Seal 2. Service Valves 3. Pump End 4. Test Connections
02	NO. 1 REFR COND UNIT	1. Receiver Dehydrator Area 2. Condenser WRV Line 3. Charge/Drain Valve
03	NO. 2 REFR COMP	1. Shaft Seal 2. Service Valves 3. Pump End 4. Test Connections
04	NO. 2 REFR COND UNIT	1. Receiver Dehydrator Area 2. Condenser WRV Line 3. Charge/Drain Valve

A-6. REFR SPACES 5TH DECK

RELAY DETAILS

Parameter	Relay 1	Relay 2	Relay 3	Relay 4
Operation	Continuous	Continuous	Continuous	Continuous
Mode	System	System	System	System
Logic	Any One	Any One	Any One	Any One
Pulse (m)	03	03	03	03
Inhibit (h)	00	00	00	00
Day Time (h)	06	06	06	06
Day Factor	2.8	2.8	2.8	2.8
Night Time (h)	18	18	18	18
Night Factor	2.8	2.8	2.8	2.8
SAMM 01	X	X	X	X
SAMM 02	X	X	X	X
SAMM 03	X	X	X	X
SAMM 04	NOT USED			

SAMM DETAILS

Address	Name	Alert	Alarm	Critical	Refrigerant	Cycle Time (mins)	Pipe Length (ft)
01	NO. 1 FREEZE STRM	0050	0300	0850	R12 or R134A	010	0100
02	WR FREEZE STRM	0050	0300	0850	R12 or R134A	010	0100
03	VESTIBULE (5-60-1-A)	0050	0300	0850	R12 or R134A	010	0100
04	NOT USED						

Recommended Sampling Locations for REFR SPACES 5TH DECK

SAMM	Name	Sampling Locations
01	NO. 1 FREEZE STRM	1. Ovhd Center 2. 9” Above Deck Near Door
02	WR FREEZE STRM	1. Ovhd Center 2. 9” Above Deck Near Door
03	VESTIBULE (5-60-1-A)	1. TXV Area 2. Service Valves
04	NOT USED	

A-7. REFR SPACES 4TH DECK

RELAY DETAILS

Parameter	Relay 1	Relay 2	Relay 3	Relay 4
Operation	Continuous	Continuous	Continuous	Continuous
Mode	System	System	System	System
Logic	Any One	Any One	Any One	Any One
Pulse (m)	03	03	03	03
Inhibit (h)	00	00	00	00
Day Time (h)	06	06	06	06
Day Factor	2.8	2.8	2.8	2.8
Night Time (h)	18	18	18	18
Night Factor	2.8	2.8	2.8	2.8
SAMM 01	X	X	X	X
SAMM 02	X	X	X	X
SAMM 03	X	X	X	X
SAMM 04	NOT USED			

SAMM DETAILS

Address	Name	Alert	Alarm	Critical	Refrigerant	Cycle Time (mins)	Pipe Length (ft)
01	NO. 1 CHILL STRM	0050	0300	0850	R12 or R134A	010	0100
02	NO. 2 FREEZE STRM	0050	0300	0850	R12 or R134A	010	0100
03	VESTIBULE (4-58-1-L)	0050	0300	0850	R12 or R134A	010	0100
04	NOT USED						

Recommended Sampling Locations for REFR SPACES 4TH DECK

SAMM	Name	Sampling Locations
01	NO. 1 CHILL STRM	1. Ovhd Center 2. 9” Above Deck Near Door
02	NO. 2 FREEZE STRM	1. Ovhd Center 2. 9” Above Deck Near Door
03	VESTIBULE (4-58-1-L)	1. TXV Area 2. Service Valves
04	NOT USED	

APPENDIX B

(AGF 11)

B-1. AC PLANTS NO. 1 & 2

RELAY DETAILS

Parameter	Relay 1	Relay 2	Relay 3	Relay 4
Operation	Continuous	Continuous	Continuous	Continuous
Mode	System	System	System	System
Logic	Any One	Any One	Any One	Any One
Pulse (m)	03	03	03	03
Inhibit (h)	00	00	00	00
Day Time (h)	06	06	06	06
Day Factor	2.8	2.8	2.8	2.8
Night Time (h)	18	18	18	18
Night Factor	2.8	2.8	2.8	2.8
SAMM 01	X	X	X	X
SAMM 02	X	X	X	X
SAMM 03	X	X	X	X
SAMM 04	X	X	X	X

SAMM DETAILS

Address	Name	Alert	Alarm	Critical	Refrigerant	Cycle Time (mins)	Pipe Length (ft)
01	NO. 1 AC COND/CHILLER	0050	0300	0850	R134A	010	0100
02	NO. 1 AC COMP	0050	0300	0850	R134A	010	0100
03	NO. 2 AC COMP	0050	0300	0850	R134A	010	0100
04	NO. 2 AC COND/CHILLER	0050	0300	0850	R134A	010	0100

Recommended Sampling Locations for AC PLANTS NO. 1 & 2

SAMM	Name	Sampling Locations
01	NO. 1 AC COND/CHILLER	1. Receiver Inlet/Outlet Valves 2. TXV Area 3. Chiller on Charge Valve Side 4. Cond Purge Valve Area
02	NO. 1 AC COMP	1. Inside Control Cab Test Conns 2. Shaft Seal 3. Comp Disch Valves 4. Comp Bearing End Conns
03	NO. 2 AC COMP	1. Inside Control Cab Test Conns 2. Shaft Seal 3. Comp Disch Valves 4. Comp Bearing End Conns
04	NO. 2 AC COND/CHILLER	1. Receiver Inlet/Outlet Valves 2. TXV Area 3. Chiller on Charge Valve Side 4. Cond Purge Valve Area

B-2. AC PLANTS NO. 3 & 4

RELAY DETAILS

Parameter	Relay 1	Relay 2	Relay 3	Relay 4
Operation	Continuous	Continuous	Continuous	Continuous
Mode	System	System	System	System
Logic	Any One	Any One	Any One	Any One
Pulse (m)	03	03	03	03
Inhibit (h)	00	00	00	00
Day Time (h)	06	06	06	06
Day Factor	2.8	2.8	2.8	2.8
Night Time (h)	18	18	18	18
Night Factor	2.8	2.8	2.8	2.8
SAMM 01	X	X	X	X
SAMM 02	X	X	X	X
SAMM 03	X	X	X	X
SAMM 04	X	X	X	X

SAMM DETAILS

Address	Name	Alert	Alarm	Critical	Refrigerant	Cycle Time (mins)	Pipe Length (ft)
01	NO. 3 AC COND/CHILLER	0050	0300	0850	R134A	010	0100
02	NO. 4 AC COND/CHILLER	0050	0300	0850	R134A	010	0100
03	NO. 3 AC COMP	0050	0300	0850	R134A	010	0100
04	NO. 4 AC COMP	0050	0300	0850	R134A	010	0100

Recommended Sampling Locations for AC PLANTS NO. 3 & 4

SAMM	Name	Sampling Locations
01	NO. 3 AC COND/CHILLER	1. Receiver Inlet/Outlet Valves 2. TXV Area 3. Chiller on Charge Valve Side 4. Cond Purge Valve Area
02	NO. 4 AC COND/CHILLER	1. Receiver Inlet/Outlet Valves 2. TXV Area 3. Chiller on Charge Valve Side 4. Cond Purge Valve Area
03	NO. 3 AC COMP	1. Inside Control Cab Test Conns 2. Shaft Seal 3. Comp Disch Valves 4. Comp Bearing End Conns
04	NO. 4 AC COMP	1. Inside Control Cab Test Conns 2. Shaft Seal 3. Comp Disch Valves 4. Comp Bearing End Conns

B-3. AC PLANTS NO. 5, 6, 7, 8, 9, 10

RELAY DETAILS

Parameter	Relay 1	Relay 2	Relay 3	Relay 4
Operation	Continuous	Continuous	Continuous	Continuous
Mode	System	System	System	System
Logic	Any One	Any One	Any One	Any One
Pulse (m)	03	03	03	03
Inhibit (h)	00	00	00	00
Day Time (h)	06	06	06	06
Day Factor	2.8	2.8	2.8	2.8
Night Time (h)	18	18	18	18
Night Factor	2.8	2.8	2.8	2.8
SAMM 01	X	X	X	X
SAMM 02	X	X	X	X
SAMM 03	X	X	X	X
SAMM 04	X	X	X	X
SAMM 05	X	X	X	X
SAMM 06	X	X	X	X
SAMM 07	NOT USED			
SAMM 08	NOT USED			

SAMM DETAILS

Address	Name	Alert	Alarm	Critical	Refrigerant	Cycle Time (mins)	Pipe Length (ft)
01	NO. 5 AC PLANT	0050	0300	0850	R134A	010	0100
02	NO. 6 AC PLANT	0050	0300	0850	R134A	010	0100
03	NO. 7 AC PLANT	0050	0300	0850	R134A	010	0100
04	NO. 8 AC PLANT	0050	0300	0850	R134A	010	0100
05	NO. 9 AC PLANT	0050	0300	0850	R134A	010	0100
06	NO. 10 AC PLANT	0050	0300	0850	R134A	010	0100
07	NOT USED						
08	NOT USED						

Recommended Sampling Locations for AC PLANTS NO. 5, 6, 7, 8, 9, 10

SAMM	Name	Sampling Locations
01	NO. 5 AC PLANT	1. Compressor 2. Test Conn Valves 3. TXV Area 4. Rcvr Inlet/Outlet Valves
02	NO. 6 AC PLANT	1. Compressor 2. Test Conn Valves 3. TXV Area 4. Rcvr Inlet/Outlet Valves
03	NO. 7 AC PLANT	1. Compressor 2. Test Conn Valves 3. TXV Area 4. Rcvr Inlet/Outlet Valves
04	NO. 8 AC PLANT	1. Compressor 2. Test Conn Valves 3. TXV Area 4. Rcvr Inlet/Outlet Valves
05	NO. 9 AC PLANT	1. Compressor 2. Test Conn Valves 3. TXV Area 4. Rcvr Inlet/Outlet Valves
06	NO. 10 AC PLANT	1. Compressor 2. Test Conn Valves 3. TXV Area 4. Rcvr Inlet/Outlet Valves
07	NOT USED	
08	NOT USED	

B-4. AC PLANTS NO. 11 & 12

RELAY DETAILS

Parameter	Relay 1	Relay 2	Relay 3	Relay 4
Operation	Continuous	Continuous	Continuous	Continuous
Mode	System	System	System	System
Logic	Any One	Any One	Any One	Any One
Pulse (m)	03	03	03	03
Inhibit (h)	00	00	00	00
Day Time (h)	06	06	06	06
Day Factor	2.8	2.8	2.8	2.8
Night Time (h)	18	18	18	18
Night Factor	2.8	2.8	2.8	2.8
SAMM 01	X	X	X	X
SAMM 02	X	X	X	X
SAMM 03	X	X	X	X
SAMM 04	X	X	X	X

SAMM DETAILS

Address	Name	Alert	Alarm	Critical	Refrigerant	Cycle Time (mins)	Pipe Length (ft)
01	NO. 11 AC PLANT FRONT	0050	0300	0850	R236FA	010	0100
02	NO. 11 AC PLANT BACK	0050	0300	0850	R236FA	010	0100
03	NO. 12 AC PLANT FRONT	0050	0300	0850	R236FA	010	0100
04	NO. 12 AC PLANT BACK	0050	0300	0850	R236FA	010	0100

Recommended Sampling Locations for AC PLANTS NO. 11 & 12

SAMM	Name	Sampling Locations
01	NO. 11 AC PLANT FRONT	1. Refrig Test Conn 2. Hot Gas Bypass Valve 3. C/D Valve
02	NO. 11 AC PLANT BACK	1. CWCV 2. Chiller Low 3. Compressor
03	NO. 12 AC PLANT FRONT	1. Refrig Test Conn 2. Hot Gas Bypass Valve 3. C/D Valve
04	NO. 12 AC PLANT BACK	1. CWCV 2. Chiller Low 3. Compressor

B-5. REFR PLANTS NO. 1 & 2

RELAY DETAILS

Parameter	Relay 1	Relay 2	Relay 3	Relay 4
Operation	Continuous	Continuous	Continuous	Continuous
Mode	System	System	System	System
Logic	Any One	Any One	Any One	Any One
Pulse (m)	03	03	03	03
Inhibit (h)	00	00	00	00
Day Time (h)	06	06	06	06
Day Factor	2.8	2.8	2.8	2.8
Night Time (h)	18	18	18	18
Night Factor	2.8	2.8	2.8	2.8
SAMM 01	X	X	X	X
SAMM 02	X	X	X	X
SAMM 03	X	X	X	X
SAMM 04	X	X	X	X

SAMM DETAILS

Address	Name	Alert	Alarm	Critical	Refrigerant	Cycle Time (mins)	Pipe Length (ft)
01	NO. 1 REFR COMP	0050	0300	0850	R134A	010	0100
02	NO. 1 REFR COND UNIT	0050	0300	0850	R134A	010	0100
03	NO. 2 REFR COMP	0050	0300	0850	R134A	010	0100
04	NO. 2 REFR COND UNIT	0050	0300	0850	R134A	010	0100

Recommended Sampling Locations for REFR PLANTS NO. 1 & 2

SAMM	Name	Sampling Locations
01	NO. 1 REFR COMP	1. Shaft Seal 2. Service Valves
02	NO. 1 REFR COND UNIT	1. Receiver Dehydrator Area 2. Condenser WRV Line
03	NO. 2 REFR COMP	1. Shaft Seal 2. Service Valves
04	NO. 2 REFR COND UNIT	1. Receiver Dehydrator Area 2. Condenser WRV Line

B-6. REFR SPACES

RELAY DETAILS

Parameter	Relay 1	Relay 2	Relay 3	Relay 4
Operation	Continuous	Continuous	Continuous	Continuous
Mode	System	System	System	System
Logic	Any One	Any One	Any One	Any One
Pulse (m)	03	03	03	03
Inhibit (h)	00	00	00	00
Day Time (h)	06	06	06	06
Day Factor	2.8	2.8	2.8	2.8
Night Time (h)	18	18	18	18
Night Factor	2.8	2.8	2.8	2.8
SAMM 01	X	X	X	X
SAMM 02	X	X	X	X
SAMM 03	X	X	X	X
SAMM 04	X	X	X	X
SAMM 05	X	X	X	X
SAMM 06	X	X	X	X
SAMM 07	NOT USED			
SAMM 08	NOT USED			

SAMM DETAILS

Address	Name	Alert	Alarm	Critical	Refrigerant	Cycle Time (mins)	Pipe Length (ft)
01	NO. 1 REFR STRM	0050	0300	0850	R134A	010	0100
02	NO. 2 REFR STRM	0050	0300	0850	R134A	010	0100
03	PASSAGEWAY (4-60-1-L)	0050	0300	0850	R134A	010	0100
04	NO. 3 REFR STRM	0050	0300	0850	R134A	010	0100
05	NO. 4 REFR STRM	0050	0300	0850	R134A	010	0100
06	PASSAGEWAY (5-60-1-L)	0050	0300	0850	R134A	010	0100
07	NOT USED						
08	NOT USED						

Recommended Sampling Locations for REFR SPACES

SAMM	Name	Sampling Locations
01	NO. 1 REFR STRM	1. Ovhd Center 2. 9” Above Deck Near Door
02	NO. 2 REFR STRM	1. Ovhd Center 2. 9” Above Deck Near Door
03	PASSAGEWAY (4-60-1-L)	1. TXV Area 2. Service Valves
04	NO. 3 REFR STRM	1. Ovhd Center 2. 9” Above Deck Near Door
05	NO. 4 REFR STRM	1. Ovhd Center 2. 9” Above Deck Near Door
06	PASSAGEWAY (5-60-1-L)	1. TXV Area 2. Service Valves
07	NOT USED	
08	NOT USED	

APPENDIX C

(AOE)

SECTION C1

(AOE 1)

C1-1. AC PLANTS NO. 1 & 2

RELAY DETAILS

Parameter	Relay 1	Relay 2	Relay 3	Relay 4
Operation	Continuous	Continuous	Continuous	Continuous
Mode	System	System	System	System
Logic	Any One	Any One	Any One	Any One
Pulse (m)	03	03	03	03
Inhibit (h)	00	00	00	00
Day Time (h)	06	06	06	06
Day Factor	2.8	2.8	2.8	2.8
Night Time (h)	18	18	18	18
Night Factor	2.8	2.8	2.8	2.8
SAMM 01	X	X	X	X
SAMM 02	X	X	X	X
SAMM 03	X	X	X	X
SAMM 04	X	X	X	X

SAMM DETAILS

Address	Name	Alert	Alarm	Critical	Refrigerant	Cycle Time (mins)	Pipe Length (ft)
01	NO. 1 AC PLANT FRONT	0050	0300	0850	R114 or R236FA	010	0100
02	NO. 1 AC PLANT BACK	0050	0300	0850	R114 or R236FA	010	0100
03	NO. 2 AC COMPRESSOR	0050	0300	0850	R12 or R134A	010	0100
04	NO. 2 AC COND/RCVR	0050	0300	0850	R12 or R134A	010	0100

Recommended Sampling Locations for AC PLANTS NO. 1 & 2

SAMM	Name	Sampling Locations
01	NO. 1 AC PLANT FRONT	1. Charge and Drain Valves 2. Purge Pumpout Unit 3. CWCV
02	NO. 1 AC PLANT BACK	1. Gageboard Area 2. Cond/CWCV Sensing Line 3. Chiller Low
03	NO. 2 AC COMPRESSOR	1. Compressor Service Valves 2. Shaft Seal 3. CWCV

SAMM	Name	Sampling Locations
04	NO. 2 AC COND/RCVR	1. TXV/King Valve/Receiver 2. Cond/CWCV Sensing Line 3. Chiller Low

C1-2. AC PLANTS NO. 3 & 4

RELAY DETAILS

Parameter	Relay 1	Relay 2	Relay 3	Relay 4
Operation	Continuous	Continuous	Continuous	Continuous
Mode	System	System	System	System
Logic	Any One	Any One	Any One	Any One
Pulse (m)	03	03	03	03
Inhibit (h)	00	00	00	00
Day Time (h)	06	06	06	06
Day Factor	2.8	2.8	2.8	2.8
Night Time (h)	18	18	18	18
Night Factor	2.8	2.8	2.8	2.8
SAMM 01	X	X	X	X
SAMM 02	X	X	X	X
SAMM 03	X	X	X	X
SAMM 04	X	X	X	X

SAMM DETAILS

Address	Name	Alert	Alarm	Critical	Refrigerant	Cycle Time (mins)	Pipe Length (ft)
01	NO. 3 AC PLANT COND/ CHILLER	0050	0300	0850	R12 or R134A	010	0100
02	NO. 3 AC PLANT COMPRES-SOR	0050	0300	0850	R12 or R134A	010	0100
03	NO. 4 AC PLANT COND/ CHILLER	0050	0300	0850	R12 or R134A	010	0100
04	NO. 4 AC PLANT COMPRES-SOR	0050	0300	0850	R12 or R134A	010	0100

Recommended Sampling Locations for AC PLANTS NO. 3 & 4

SAMM	Name	Sampling Locations
01	NO. 3 AC PLANT COND/ CHILLER	1. TXV 2. Charge and Drain Valves 3. Cond/WRV Sensing Line
02	NO. 3 AC PLANT COMPRES-SOR	1. Suction and Discharge Valves 2. Shaft Seal 3. Gage Boards
03	NO. 4 AC PLANT COND/ CHILLER	1. TXV 2. Charge and Drain Valves 3. Cond/WRV Sensing Line
04	NO. 4 AC PLANT COMPRES-SOR	1. Suction and Discharge Valves 2. Shaft Seal 3. Gage Boards

C1-3. NO. 1 MMR CARGO REEFER FLATS

RELAY DETAILS

Parameter	Relay 1	Relay 2	Relay 3	Relay 4
Operation	Continuous	Continuous	Continuous	Continuous
Mode	System	System	System	System
Logic	Any One	Any One	Any One	Any One
Pulse (m)	03	03	03	03
Inhibit (h)	00	00	00	00
Day Time (h)	06	06	06	06
Day Factor	2.8	2.8	2.8	2.8
Night Time (h)	18	18	18	18
Night Factor	2.8	2.8	2.8	2.8
SAMM 01	X	X	X	X
SAMM 02	X	X	X	X
SAMM 03	X	X	X	X
SAMM 04	X	X	X	X

SAMM DETAILS

Address	Name	Alert	Alarm	Critical	Refrigerant	Cycle Time (mins)	Pipe Length (ft)
01	NO. 1 CARGO REFR PLANT	0050	0300	0850	R12 or R134A	010	0100
02	NO. 2 CARGO REFR PLANT	0050	0300	0850	R12 or R134A	010	0100
03	NO. 3 CARGO REFR PLANT	0050	0300	0850	R12 or R134A	010	0100
04	NO. 4 CARGO REFR PLANT	0050	0300	0850	R12 or R134A	010	0100

Recommended Sampling Locations for NO. 1 MMR CARGO REEFER FLATS

SAMM	Name	Sampling Locations
01	NO. 1 CARGO REFR PLANT	1. Between Condenser and WRV 2. Below Gageboard 3. Below Receiver King Valve End 4. Shaft Seal
02	NO. 2 CARGO REFR PLANT	1. Between Condenser and WRV 2. Below Gageboard 3. Below Receiver King Valve End 4. Shaft Seal
03	NO. 3 CARGO REFR PLANT	1. Between Condenser and WRV 2. Below Gageboard 3. Below Receiver King Valve End 4. Shaft Seal
04	NO. 4 CARGO REFR PLANT	1. Between Condenser and WRV 2. Below Gageboard 3. Below Receiver King Valve End 4. Shaft Seal

C1-4. SS REFR SYSTEMS (2-250-2-E)

RELAY DETAILS

Parameter	**Relay 1**	**Relay 2**	**Relay 3**	**Relay 4**
Operation	Continuous	Continuous	Continuous	Continuous
Mode	System	System	System	System
Logic	Any One	Any One	Any One	Any One
Pulse (m)	03	03	03	03
Inhibit (h)	00	00	00	00
Day Time (h)	06	06	06	06
Day Factor	2.8	2.8	2.8	2.8
Night Time (h)	18	18	18	18
Night Factor	2.8	2.8	2.8	2.8
SAMM 01	X	X	X	X
SAMM 02	X	X	X	X
SAMM 03	X	X	X	X
SAMM 04	X	X	X	X
SAMM 05	X	X	X	X
SAMM 06	X	X	X	X
SAMM 07	NOT USED			
SAMM 08	NOT USED			

SAMM DETAILS

Address	**Name**	**Alert**	**Alarm**	**Critical**	**Refrigerant**	**Cycle Time (mins)**	**Pipe Length (ft)**
01	CHILL STRM NO. 1	0050	0300	0850	R12 or R134A	010	0100
02	FREEZE STRM	0050	0300	0850	R12 or R134A	010	0100
03	CHILL STRM NO. 2	0050	0300	0850	R12 or R134A	010	0100
04	TXV	0050	0300	0850	R12 or R134A	010	0100
05	REFR PLANT NO. 1	0050	0300	0850	R12 or R134A	010	0100
06	REFR PLANT NO. 2	0050	0300	0850	R12 or R134A	010	0100
07	NOT USED						
08	NOT USED						

Recommended Sampling Locations for REFR SPACES

SAMM	Name	Sampling Locations
01	CHILL STRM NO. 1	1. Top Center 2. One Foot Above Deck Near Door
02	FREEZE STRM	1. Top Center 2. One Foot Above Deck Near Door
03	CHILL STRM NO. 2	1. Top Center 2. One Foot Above Deck Near Door
04	TXV	1. Freeze Strm TXV 2. Chill Strm No. 1 TXV 3. Chill Strm No. 2 TXV
05	REFR PLANT NO. 1	1. Compressor Area 2. Cond/Receiver Area 3. Dehydrator/Valves and No. 1 Gageboard
06	REFR PLANT NO. 2	1. Compressor Area 2. Cond/Receiver Area 3. Dehydrator/Valves and No. 2 Gageboard
07	NOT USED	
08	NOT USED	

C1-5. CARGO REFR BOXES (3-174-2-L)

RELAY DETAILS

Parameter	Relay 1	Relay 2	Relay 3	Relay 4
Operation	Continuous	Continuous	Continuous	Continuous
Mode	System	System	System	System
Logic	Any One	Any One	Any One	Any One
Pulse (m)	03	03	03	03
Inhibit (h)	00	00	00	00
Day Time (h)	06	06	06	06
Day Factor	2.8	2.8	2.8	2.8
Night Time (h)	18	18	18	18
Night Factor	2.8	2.8	2.8	2.8
SAMM 01	X	X	X	X
SAMM 02	X	X	X	X
SAMM 03	X	X	X	X
SAMM 04	X	X	X	X
SAMM 05	X	X	X	X
SAMM 06	X	X	X	X
SAMM 07	X	X	X	X
SAMM 08	NOT USED			

SAMM DETAILS

Address	Name	Alert	Alarm	Critical	Refrigerant	Cycle Time (mins)	Pipe Length (ft)
01	REFR CARGO STRM (2-186-0-AA)	0050	0300	0850	R12 or R134A	010	0100
02	DRY CARGO STRM (2-174-0-AA)	0050	0300	0850	R12 or R134A	010	0100
03	REFR CARGO STRM (3-186-0-AA)	0050	0300	0850	R12 or R134A	010	0100
04	DRY CARGO STRM (3-174-0-AA)	0050	0300	0850	R12 or R134A	010	0100
05	REFR CARGO STRM (4-174-0-AA)	0050	0300	0850	R12 or R134A	010	0100
06	DRY CARGO STRM (4-174-0-AA)	0050	0300	0850	R12 or R134A	010	0100
07	MINE AND DEPTH CHG BATT STOWAGE	0050	0300	0850	R12 or R134A	010	0100
08	NOT USED						

Recommended Sampling Locations for CARGO REFR BOXES (3-174-2-L)

SAMM	Name	Sampling Locations
01	REFR CARGO STRM (2-186-0-AA)	1. Ovhd Center 2. 9” Above Deck Near Door 3. No. 1 Diffuser in Diffuser Rm
02	DRY CARGO STRM (2-174-0-AA)	1. Liquid Control Panel - TXVs 2. Liquid Control Panel - Diffuser Rm Driers 3. Evaporator Pressure Regulator Assembly
03	REFR CARGO STRM (3-186-0-AA)	1. Ovhd Center 2. 9” Above Deck Near Door 3. Diffuser Rm
04	DRY CARGO STRM (3-174-0-AA)	1. Liquid Control Panel - TXVs 2. Liquid Control Panel - Diffuser Rm Driers 3. Evaporator Pressure Regulator Assembly
05	REFR CARGO STRM (4-174-0-AA)	1. Ovhd Center 2. 9” Above Deck Near Door 3. No. 1 Diffuser Rm
06	DRY CARGO STRM (4-174-0-AA)	1. Liquid Control Panel - TXVs 2. Liquid Control Panel - Diffuser Rm Driers 3. Evaporator Pressure Regulator Assembly
07	MINE AND DEPTH CHG BATT STOWAGE	1. Ovhd Center 2. 9” Above Deck Near Door
08	NOT USED	

SECTION C2
(AOE 2; UNDER DEVELOPMENT)

C2-1.

SECTION C3

(AOE 3 & 4)

C3-1. AC PLANTS 1A & 1B

RELAY DETAILS

Parameter	Relay 1	Relay 2	Relay 3	Relay 4
Operation	Continuous	Continuous	Continuous	Continuous
Mode	System	System	System	System
Logic	Any One	Any One	Any One	Any One
Pulse (m)	03	03	03	03
Inhibit (h)	00	00	00	00
Day Time (h)	06	06	06	06
Day Factor	2.8	2.8	2.8	2.8
Night Time (h)	18	18	18	18
Night Factor	2.8	2.8	2.8	2.8
SAMM 01	X	X	X	X
SAMM 02	X	X	X	X
SAMM 03	X	X	X	X
SAMM 04	X	X	X	X

SAMM DETAILS

Address	Name	Alert	Alarm	Critical	Refrigerant	Cycle Time (mins)	Pipe Length (ft)
01	1A COMPRESSOR	0050	0300	0850	R12 or R134A	010	0100
02	1A PLANT	0050	0300	0850	R12 or R134A	010	0100
03	1B COMPRESSOR	0050	0300	0850	R12 or R134A	010	0100
04	1B PLANT	0050	0300	0850	R12 or R134A	010	0100

Recommended Sampling Locations for AC PLANTS 1A & 1B

SAMM	Name	Sampling Locations
01	1A COMPRESSOR	1. Compressor Service Valves 2. Shaft Seal 3. Inside Control Panel 4. WRV
02	1A PLANT	1. TXV 2. King Valve/Receiver 3. Condenser/WRV Sensing Line 4. Chiller Low
03	1B COMPRESSOR	1. Compressor Service Valves 2. Shaft Seal 3. Inside Control Panel 4. WRV

SAMM	Name	Sampling Locations
04	1B PLANT	1. TXV 2. King Valve/Receiver 3. Condenser/WRV Sensing Line 4. Chiller Low

C3-2. AC PLANTS 2A, 2B, 2C

RELAY DETAILS

Parameter	**Relay 1**	**Relay 2**	**Relay 3**	**Relay 4**
Operation	Continuous	Continuous	Continuous	Continuous
Mode	System	System	System	System
Logic	Any One	Any One	Any One	Any One
Pulse (m)	03	03	03	03
Inhibit (h)	00	00	00	00
Day Time (h)	06	06	06	06
Day Factor	2.8	2.8	2.8	2.8
Night Time (h)	18	18	18	18
Night Factor	2.8	2.8	2.8	2.8
SAMM 01	X	X	X	X
SAMM 02	X	X	X	X
SAMM 03	X	X	X	X
SAMM 04	X	X	X	X
SAMM 05	X	X	X	X
SAMM 06	X	X	X	X
SAMM 07	X	X	X	X
SAMM 08	NOT USED			

SAMM DETAILS

Address	**Name**	**Alert**	**Alarm**	**Critical**	**Refrigerant**	**Cycle Time (mins)**	**Pipe Length (ft)**
01	2A PLANT	0050	0300	0850	R12 or R134A	010	0100
02	2A COMPRESSOR	0050	0300	0850	R12 or R134A	010	0100
03	2B PLANT	0050	0300	0850	R12 or R134A	010	0100
04	2B COMPRESSOR	0050	0300	0850	R12 or R134A	010	0100
05	2C PLANT	0050	0300	0850	R12 or R134A	010	0100
06	2C COMPRESSOR	0050	0300	0850	R12 or R134A	010	0100
07	2C WRV	0050	0300	0850	R12 or R134A	010	0100
08	NOT USED						

Recommended Sampling Locations for AC PLANTS 2A, 2B, 2C

SAMM	Name	Sampling Locations
01	2A PLANT	1. TXV 2. King Valve/Receiver 3. Condenser/WRV Sensing Line 4. WRV
02	2A COMPRESSOR	1. Compressor Service Valves 2. Shaft Seal 3. Inside Control Panel
03	2B PLANT	1. TXV 2. King Valve/Receiver 3. Condenser/WRV Sensing Line 4. WRV
04	2B COMPRESSOR	1. Compressor Service Valves 2. Shaft Seal 3. Inside Control Panel
05	2C PLANT	1. TXV 2. King Valve/Receiver 3. Condenser/WRV Sensing Line 4. WRV
06	2C COMPRESSOR	1. Compressor Service Valves 2. Shaft Seal 3. Inside Control Panel
07	2C WRV	2C WRV
08	NOT USED	

C3-3. NO. 1 MMR CARGO REFR FLATS

RELAY DETAILS

Parameter	Relay 1	Relay 2	Relay 3	Relay 4
Operation	Continuous	Continuous	Continuous	Continuous
Mode	System	System	System	System
Logic	Any One	Any One	Any One	Any One
Pulse (m)	03	03	03	03
Inhibit (h)	00	00	00	00
Day Time (h)	06	06	06	06
Day Factor	2.8	2.8	2.8	2.8
Night Time (h)	18	18	18	18
Night Factor	2.8	2.8	2.8	2.8
SAMM 01	X	X	X	X
SAMM 02	X	X	X	X
SAMM 03	X	X	X	X
SAMM 04	NOT USED			

SAMM DETAILS

Address	Name	Alert	Alarm	Critical	Refrigerant	Cycle Time (mins)	Pipe Length (ft)
01	NO. 1 CARGO REFR PLANT	0050	0300	0850	R12 or R134A	010	0100
02	NO. 2 CARGO REFR PLANT	0050	0300	0850	R12 or R134A	010	0100
03	NO. 3 CARGO REFR PLANT	0050	0300	0850	R12 or R134A	010	0100
04	NOT USED						

Recommended Sampling Locations for NO. 1 MMR CARGO REFR FLATS

SAMM	Name	Sampling Locations
01	NO. 1 CARGO REFR PLANT	1. Between Condenser and WRV 2. Below Gageboard 3. Below Receiver King Valve End 4. Shaft Seal
02	NO. 2 CARGO REFR PLANT	1. Between Condenser and WRV 2. Below Gageboard 3. Below Receiver King Valve End 4. Shaft Seal
03	NO. 3 CARGO REFR PLANT	1. Between Condenser and WRV 2. Below Gageboard 3. Below Receiver King Valve End 4. Shaft Seal
04	NOT USED	

C3-4. SS REFR PROVISIONS STRM

RELAY DETAILS

Parameter	Relay 1	Relay 2	Relay 3	Relay 4
Operation	Continuous	Continuous	Continuous	Continuous
Mode	System	System	System	System
Logic	Any One	Any One	Any One	Any One
Pulse (m)	03	03	03	03
Inhibit (h)	00	00	00	00
Day Time (h)	06	06	06	06
Day Factor	2.8	2.8	2.8	2.8
Night Time (h)	18	18	18	18
Night Factor	2.8	2.8	2.8	2.8
SAMM 01	X	X	X	X
SAMM 02	X	X	X	X
SAMM 03	X	X	X	X
SAMM 04	X	X	X	X
SAMM 05	X	X	X	X
SAMM 06	X	X	X	X
SAMM 07	X	X	X	X
SAMM 08	X	X	X	X

SAMM DETAILS

Address	Name	Alert	Alarm	Critical	Refrigerant	Cycle Time (mins)	Pipe Length (ft)
01	FREEZE STRM NO. 1	0050	0300	0850	R12 or R134A	010	0100
02	FREEZE STRM NO. 2	0050	0300	0850	R12 or R134A	010	0100
03	CHILL STRM NO. 1	0050	0300	0850	R12 or R134A	010	0100
04	CHILL STRM NO. 2	0050	0300	0850	R12 or R134A	010	0100
05	TXV	0050	0300	0850	R12 or R134A	010	0100
06	REFR PLANT NO. 1	0050	0300	0850	R12 or R134A	010	0100
07	REFR PLANT NO. 2	0050	0300	0850	R12 or R134A	010	0100
08	MACH RM GAGEBOARDS	0050	0300	0850	R12 or R134A	010	0100

Recommended Sampling Locations for SS REFR PROVISIONS STRM

SAMM	Name	Sampling Locations
01	FREEZE STRM NO. 1	1. Top Center 2. 9” Above Deck Near Door
02	FREEZE STRM NO. 2	1. Top Center 2. 9” Above Deck Near Door
03	CHILL STRM NO. 1	1. Top Center 2. 9” Above Deck Near Door
04	CHILL STRM NO. 2	1. Top Center 2. 9” Above Deck Near Door
05	TXV	1. Freeze Strm No. 1 TXV 2. Freeze Strm No. 2 TXV 3. Chill Strm No. 1 TXV 4. Chill Strm No. 2 TXV
06	REFR PLANT NO. 1	1. Compressor Area 2. Condenser/Receiver Area 3. Dehydrator/Valves
07	REFR PLANT NO. 2	1. Compressor Area 2. Condenser/Receiver Area 3. Dehydrator/Valves
08	MACH RM GAGEBOARDS	1. No. 1 Gageboard 2. No. 2 Gageboard

C3-5. CARGO REFR BOXES (AOE 3 ONLY)

RELAY DETAILS

Parameter	Relay 1	Relay 2	Relay 3	Relay 4
Operation	Continuous	Continuous	Continuous	Continuous
Mode	System	System	System	System
Logic	Any One	Any One	Any One	Any One
Pulse (m)	03	03	03	03
Inhibit (h)	00	00	00	00
Day Time (h)	06	06	06	06
Day Factor	2.8	2.8	2.8	2.8
Night Time (h)	18	18	18	18
Night Factor	2.8	2.8	2.8	2.8
SAMM 01	X	X	X	X
SAMM 02	X	X	X	X
SAMM 03	X	X	X	X
SAMM 04	X	X	X	X
SAMM 05	X	X	X	X
SAMM 06	X	X	X	X
SAMM 07	X	X	X	X
SAMM 08	NOT USED			

SAMM DETAILS

Address	Name	Alert	Alarm	Critical	Refrigerant	Cycle Time (mins)	Pipe Length (ft)
01	CARGO STRM (2-174-0-AA)	0050	0300	0850	R12 or R134A	010	0100
02	MINE AND DEPTH CHG BATT STOWAGE	0050	0300	0850	R12 or R134A	010	0100
03	PASSAGEWAY (2-174-2-L)	0050	0300	0850	R12 or R134A	010	0100
04	CARGO STRM (3-174-0-AA)	0050	0300	0850	R12 or R134A	010	0100
05	PASSAGEWAY (3-174-2-L)	0050	0300	0850	R12 or R134A	010	0100
06	CARGO STRM (5-174-0-AA)	0050	0300	0850	R12 or R134A	010	0100
07	PASSAGEWAY (5-174-2-L)	0050	0300	0850	R12 or R134A	010	0100
08	NOT USED						

Recommended Sampling Locations for CARGO REFR BOXES (AOE 3 ONLY)

SAMM	Name	Sampling Locations
01	CARGO STRM (2-174-0-AA)	1. Ovhd Center 2. 9” Above Deck Near Door 3. No. 1 Diffuser in Diffuser Room 4. No. 2 Diffuser in Diffuser Room
02	MINE AND DEPTH CHG BATT STOWAGE	1. Ovhd Center 2. 9” Above Deck Near Door
03	PASSAGEWAY (2-174-2-L)	1. Liquid Control Panel for 2-174-4-AA 2. Liquid Control Panel for Diffuser Room 3. Evaporator Pressure Regulator Assembly
04	CARGO STRM (3-174-0-AA)	1. Ovhd Center 2. 9” Above Deck Near Door 3. No. 1 Diffuser Room 4. No. 2 Diffuser Room
05	PASSAGEWAY (3-174-2-L)	1. Liquid Control Panel for No. 1 Diffuser Room 2. Liquid Control Panel for No. 2 Diffuser Room 3. Evaporator Pressure Regulator Assembly for No. 1 Diffuser Room 4. Evaporator Pressure Regulator Assembly for No. 2 Diffuser Room
06	CARGO STRM (5-174-0-AA)	1. Ovhd Center 2. 9” Above Deck Near Door 3. Diffuser Room
07	PASSAGEWAY (5-174-2-L)	1. Liquid Control Panel for Diffuser Room 2. Evaporator Pressure Regulator for Diffuser Room
08	NOT USED	

C3-6. CARGO REFR BOXES (AOE 4 ONLY)

RELAY DETAILS

Parameter	Relay 1	Relay 2	Relay 3	Relay 4
Operation	Continuous	Continuous	Continuous	Continuous
Mode	System	System	System	System
Logic	Any One	Any One	Any One	Any One
Pulse (m)	03	03	03	03
Inhibit (h)	00	00	00	00
Day Time (h)	06	06	06	06
Day Factor	2.8	2.8	2.8	2.8
Night Time (h)	18	18	18	18
Night Factor	2.8	2.8	2.8	2.8
SAMM 01	X	X	X	X
SAMM 02	X	X	X	X
SAMM 03	X	X	X	X
SAMM 04	X	X	X	X
SAMM 05	X	X	X	X
SAMM 06	X	X	X	X
SAMM 07	X	X	X	X
SAMM 08	NOT USED			

SAMM DETAILS

Address	Name	Alert	Alarm	Critical	Refrigerant	Cycle Time (mins)	Pipe Length (ft)
01	CARGO STRM (2-174-0-AA)	0050	0300	0850	R12 or R134A	010	0100
02	MINE AND DEPTH CHG BATT STOWAGE	0050	0300	0850	R12 or R134A	010	0100
03	PASSAGEWAY (2-174-2-L)	0050	0300	0850	R12 or R134A	010	0100
04	CARGO STRM (3-174-0-AA)	0050	0300	0850	R12 or R134A	010	0100
05	PASSAGEWAY (3-174-2-L)	0050	0300	0850	R12 or R134A	010	0100
06	CARGO STRM (4-186-0-AA)	0050	0300	0850	R12 or R134A	010	0100
07	PASSAGEWAY (4-174-2-L)	0050	0300	0850	R12 or R134A	010	0100
08	NOT USED						

Recommended Sampling Locations for CARGO REFR BOXES (AOE 4 ONLY)

SAMM	Name	Sampling Locations
01	CARGO STRM (2-174-0-AA)	1. Ovhd Center 2. 9” Above Deck Near Door 3. No. 1 Diffuser in Diffuser Room 4. No. 2 Diffuser in Diffuser Room
02	MINE AND DEPTH CHG BATT STOWAGE	1. Ovhd Center 2. 9” Above Deck Near Door
03	PASSAGEWAY (2-174-2-L)	1. Liquid Control Panel for Diffuser Room
04	CARGO STRM (3-174-0-AA)	1. Ovhd Center 2. 9” Above Deck Near Door 3. No. 1 Diffuser Room 4. No. 2 Diffuser Room
05	PASSAGEWAY (3-174-2-L)	1. Liquid Control Panel for No. 1 Diffuser Room 2. Liquid Control Panel for No. 2 Diffuser Room 3. Evaporator Pressure Regulator Assembly for No. 1 Diffuser Room 4. Evaporator Pressure Regulator Assembly for No. 2 Diffuser Room
06	CARGO STRM (4-186-0-AA)	1. Ovhd Center 2. 9” Above Deck Near Door 3. Diffuser Room
07	PASSAGEWAY (4-174-2-L)	1. Liquid Control Panel for Diffuser Room 2. Evaporator Pressure Regulator for Diffuser Room 3. Liquid Control Panel for 4-186-2-AA 4. Evaporator Pressure Regulator Assembly for 4-180-2-AA
08	NOT USED	

APPENDIX D

(T-AOE 6 CLASS)

D-1. AC PLANTS NO. 1 & 2

RELAY DETAILS

Parameter	Relay 1	Relay 2	Relay 3	Relay 4
Operation	Continuous	Continuous	Continuous	Continuous
Mode	System	System	System	System
Logic	Any One	Any One	Any One	Any One
Pulse (m)	03	03	03	03
Inhibit (h)	00	00	00	00
Day Time (h)	06	06	06	06
Day Factor	2.8	2.8	2.8	2.8
Night Time (h)	18	18	18	18
Night Factor	2.8	2.8	2.8	2.8
SAMM 01	X	X	X	X
SAMM 02	X	X	X	X
SAMM 03	X	X	X	X
SAMM 04	X	X	X	X

SAMM DETAILS

Address	Name	Alert	Alarm	Critical	Refrigerant	Cycle Time (mins)	Pipe Length (ft)
01	NO. 1 AC PLANT	0050	0300	0850	R114 or R236FA	010	0100
02	NO. 2 AC PLANT	0050	0300	0850	R114 or R236FA	010	0100
03	NO. 1 AC PLANT CWCV	0050	0300	0850	R114 or R236FA	010	0100
04	NO. 2 AC PLANT CWCV	0050	0300	0850	R114 or R236FA	010	0100

Recommended Sampling Locations for AC PLANTS NO. 1 & 2

SAMM	Name	Sampling Locations
01	NO. 1 AC PLANT	1. C/D Valve 2. Test Connections 3. Hot Gas Bypass Valve 4. Below Compressor
02	NO. 2 AC PLANT	1. C/D Valve 2. Test Connections 3. Hot Gas Bypass Valve 4. Below Compressor
03	NO. 1 AC PLANT CWCV	1. CWCV
04	NO. 2 AC PLANT CWCV	1. CWCV

D-2. CARGO REFR AND AC PLANTS NO. 3 & 4

RELAY DETAILS

Parameter	Relay 1	Relay 2	Relay 3	Relay 4
Operation	Continuous	Continuous	Continuous	Continuous
Mode	System	Group	Group	Group
Logic	Any One	Any One	Any One	Any One
Pulse (m)	03	03	03	03
Inhibit (h)	00	00	00	00
Day Time (h)	06	06	06	06
Day Factor	2.8	2.8	2.8	2.8
Night Time (h)	18	18	18	18
Night Factor	2.8	2.8	2.8	2.8
SAMM 01	X			X
SAMM 02	X	X		
SAMM 03	X			X
SAMM 04	X	X		
SAMM 05	X			X
SAMM 06	X		X	
SAMM 07	X			X
SAMM 08	X		X	

SAMM DETAILS

Address	Name	Alert	Alarm	Critical	Refrigerant	Cycle Time (mins)	Pipe Length (ft)
01	NO. 1 CARGO REFR PLANT	0050	0300	0850	R134A	010	0100
02	NO. 3 AC PLANT	0050	0300	0850	R114 or R236FA	010	0100
03	NO. 2 CARGO REFR PLANT	0050	0300	0850	R134A	010	0100
04	NO. 4 AC PLANT	0050	0300	0850	R114 or R236FA	010	0100
05	NO. 3 CARGO REFR PLANT	0050	0300	0850	R134A	010	0100
06	NO. 1 BAT MINE REFR PLANT	0050	0300	0850	R134A	010	0100
07	NO. 4 CARGO REFR PLANT	0050	0300	0850	R134A	010	0100
08	NO. 2 BAT MINE REFR PLANT	0050	0300	0850	R134A	010	0100

Recommended Sampling Locations for CARGO REFR AND AC PLANTS NO. 3 & 4

SAMM	Name	Sampling Locations
01	NO. 1 CARGO REFR PLANT	1. Refrig Test Connections 2. Below Shaft Seal 3. King Solenoid Valve/Dehydrator Area 4. CWCV
02	NO. 3 AC PLANT	1. C/D Valve 2. Test Connections 3. Hot Gas Bypass Valve 4. CWCV
03	NO. 2 CARGO REFR PLANT	1. Refrig Test Connections 2. Below Shaft Seal 3. King Solenoid Valve/Dehydrator Area 4. CWCV
04	NO. 4 AC PLANT	1. C/D Valve 2. Test Connections 3. Hot Gas Bypass Valve 4. CWCV
05	NO. 3 CARGO REFR PLANT	1. Refrig Test Connections 2. Below Shaft Seal 3. King Solenoid Valve/Dehydrator Area 4. CWCV
06	NO. 1 BAT MINE REFR PLANT	1. Below Shaft Seal 2. King Solenoid Valve Area 3. Receiver C/D Valve
07	NO. 4 CARGO REFR PLANT	1. Refrig Test Connections 2. Below Shaft Seal 3. King Solenoid Valve/Dehydrator Area 4. CWCV
08	NO. 2 BAT MINE REFR PLANT	1. Below Shaft Seal 2. King Solenoid Valve Area 3. Receiver C/D Valve

D-3. CARGO REFR STRM

RELAY DETAILS

Parameter	Relay 1	Relay 2	Relay 3	Relay 4
Operation	Continuous	Continuous	Continuous	Continuous
Mode	System	System	System	System
Logic	Any One	Any One	Any One	Any One
Pulse (m)	03	03	03	03
Inhibit (h)	00	00	00	00
Day Time (h)	06	06	06	06
Day Factor	2.8	2.8	2.8	2.8
Night Time (h)	18	18	18	18
Night Factor	2.8	2.8	2.8	2.8
SAMM 01	X	X	X	X
SAMM 02	X	X	X	X
SAMM 03	X	X	X	X
SAMM 04	X	X	X	X
SAMM 05	X	X	X	X
SAMM 06	X	X	X	X
SAMM 07	X	X	X	X
SAMM 08	NOT USED			

SAMM DETAILS

Address	Name	Alert	Alarm	Critical	Refrigerant	Cycle Time (mins)	Pipe Length (ft)
01	FREEZE STRM 4TH DECK	0050	0300	0850	R134A	010	0100
02	ACCESS TRUNK 4-438-2-T	0050	0300	0850	R134A	010	0100
03	ACCESS TRUNK 3-438-2-T	0050	0300	0850	R134A	010	0100
04	CARGO CHILL STRM	0050	0300	0850	R134A	010	0100
05	BATT MINE REFR STRM	0050	0300	0850	R134A	010	0100
06	CARGO FREEZE STRM 5TH DECK	0050	0300	0850	R134A	010	0100
07	ACCESS TRUNK 5-438-2-T	0050	0300	0850	R134A	010	0100
08	NOT USED						

Recommended Sampling Locations for CARGO REFR STRM

SAMM	Name	Sampling Locations
01	FREEZE STRM 4TH DECK	1. TXV Diffuser Area 2. Overhead Center 3. 9” Above Deck Near Door
02	ACCESS TRUNK 4-438-2-T	1. Strainer Area
03	ACCESS TRUNK 3-438-2-T	1. Strainer Area for Chill Strm 2. Strainer for Batt Mine Refr
04	CARGO CHILL STRM	1. TXV Diffuser Area 2. Overhead Center 3. 9” Above Deck Near Door
05	BATT MINE REFR STRM	1. Unit Cooler 2. 9” Above Deck Near Door
06	CARGO FREEZE STRM 5TH DECK	1. TXV Diffuser Area 2. Overhead Center 3. 9” Above Deck Near Door
07	ACCESS TRUNK 5-438-2-T	1. Strainer Area
08	NOT USED	

D-4. SS REFR NO. 1 & 2

RELAY DETAILS

Parameter	Relay 1	Relay 2	Relay 3	Relay 4
Operation	Continuous	Continuous	Continuous	Continuous
Mode	System	Group	System	Group
Logic	Any One	Any One	Any One	Any One
Pulse (m)	03	03	03	03
Inhibit (h)	00	00	00	00
Day Time (h)	06	06	06	06
Day Factor	2.8	2.8	2.8	2.8
Night Time (h)	18	18	18	18
Night Factor	2.8	2.8	2.8	2.8
SAMM 01	X		X	X
SAMM 02	X		X	X
SAMM 03	X	X	X	
SAMM 04	X	X	X	
SAMM 05	X	X	X	
SAMM 06	NOT USED			
SAMM 07	NOT USED			
SAMM 08	NOT USED			

SAMM DETAILS

Address	Name	Alert	Alarm	Critical	Refrigerant	Cycle Time (mins)	Pipe Length (ft)
01	NO. 1 SS REFR PLANT	0050	0300	0850	R134A	010	0100
02	NO. 2 SS REFR PLANT	0050	0300	0850	R134A	010	0100
03	SS FREEZE STRM	0050	0300	0850	R134A	010	0100
04	SS CHILL STRM	0050	0300	0850	R134A	010	0100
05	PASSAGEWAY 3-569-0-L	0050	0300	0850	R134A	010	0100
06	NOT USED						
07	NOT USED						
08	NOT USED						

Recommended Sampling Locations for SS REFR PLANTS NO. 1 & 2

SAMM	Name	Sampling Locations
01	NO. 1 SS REFR PLANT	1. Refr Test Connections 2. Compressor Shaft Seal 3. King Solenoid Valve/Dehydrator Area 4. Receiver C/D Valve
02	NO. 2 SS REFR PLANT	1. Refr Test Connections 2. Compressor Shaft Seal 3. King Solenoid Valve/Dehydrator Area 4. Receiver C/D Valve
03	SS FREEZE STRM	1. TXV 2. Unit Cooler 3. 9” Above Deck Near Door
04	SS CHILL STRM	1. TXV 2. Unit Cooler 3. 9” Above Deck Near Door
05	PASSAGEWAY 3-569-0-L	1. Chill Strm Strainer Area 2. Freeze Strm Strainer Area
06	NOT USED	
07	NOT USED	
08	NOT USED	

APPENDIX E

(ARS 50 CLASS)

E-1. MAIN MACHINERY ROOM

RELAY DETAILS

Parameter	Relay 1	Relay 2	Relay 3	Relay 4
Operation	Continuous	Continuous	Continuous	Continuous
Mode	System	System	System	System
Logic	Any One	Any One	Any One	Any One
Pulse (m)	03	03	03	03
Inhibit (h)	00	00	00	00
Day Time (h)	06	06	06	06
Day Factor	2.8	2.8	2.8	2.8
Night Time (h)	18	18	18	18
Night Factor	2.8	2.8	2.8	2.8
SAMM 01	X	X	X	X
SAMM 02	X	X	X	X
SAMM 03	X	X	X	X
SAMM 04	X	X	X	X
SAMM 05	X	X	X	X
SAMM 06	X	X	X	X
SAMM 07	NOT USED			
SAMM 08	NOT USED			

SAMM DETAILS

Address	Name	Alert	Alarm	Critical	Refrigerant	Cycle Time (mins)	Pipe Length (ft)
01	NO. 1 AC COMP	0050	0300	0850	R134A	010	0100
02	NO. 1 AC PLANT	0050	0300	0850	R134A	010	0100
03	NO. 2 AC COMP	0050	0300	0850	R134A	010	0100
04	NO. 2 AC PLANT	0050	0300	0850	R134A	010	0100
05	NO. 3 AC COMP	0050	0300	0850	R134A	010	0100
06	NO. 3 AC PLANT	0050	0300	0850	R134A	010	0100
07	NOT USED						
08	NOT USED						

Recommended Sampling Locations for MAIN MACHINERY ROOM

SAMM	Name	Sampling Locations
01	NO. 1 AC COMP	1. Compressor Pump End 2. Compressor Seal End 3. Below Suction Strainer 4. Below Gageboard
02	NO. 1 AC PLANT	1. Chiller Refr Inlet 2. Desuperheat Gage 3. Below Forward Dehydrator 4. Below Aft Dehydrator
03	NO. 2 AC COMP	1. Compressor Pump End 2. Compressor Seal End 3. Below Suction Strainer 4. Below Gageboard
04	NO. 2 AC PLANT	1. Chiller Refr Inlet 2. Desuperheat Gage 3. Below Forward Dehydrator 4. Below Aft Dehydrator
05	NO. 3 AC COMP	1. Compressor Pump End 2. Compressor Seal End 3. Below Suction Strainer 4. Below Gageboard
06	NO. 3 AC PLANT	1. Chiller Refr Inlet 2. Desuperheat Gage 3. Below Forward Dehydrator 4. Below Aft Dehydrator
07	NOT USED	
08	NOT USED	

E-2. REFER PLANTS

RELAY DETAILS

Parameter	Relay 1	Relay 2	Relay 3	Relay 4
Operation	Continuous	Continuous	Continuous	Continuous
Mode	System	System	System	System
Logic	Any One	Any One	Any One	Any One
Pulse (m)	03	03	03	03
Inhibit (h)	00	00	00	00
Day Time (h)	06	06	06	06
Day Factor	2.8	2.8	2.8	2.8
Night Time (h)	18	18	18	18
Night Factor	2.8	2.8	2.8	2.8
SAMM 01	X	X	X	X
SAMM 02	X	X	X	X
SAMM 03	X	X	X	X
SAMM 04	X	X	X	X

SAMM DETAILS

Address	Name	Alert	Alarm	Critical	Refrigerant	Cycle Time (mins)	Pipe Length (ft)
01	NO. 1 REFR COMP	0050	0300	0850	R134A	010	0100
02	NO. 1 REFR COND UNIT	0050	0300	0850	R134A	010	0100
03	NO. 2 REFR COMP	0050	0300	0850	R134A	010	0100
04	NO. 2 REFR COND UNIT	0050	0300	0850	R134A	010	0100

Recommended Sampling Locations for REFR PLANTS

SAMM	Name	Sampling Locations
01	NO. 1 REFR COMP	1. Compressor Pump End 2. Compressor Seal End 3. Oil Cooler Manifold 4. Below Gageboard
02	NO. 1 REFR COND UNIT	1. Charging Valve 2. Drain Valve
03	NO. 2 REFR COMP	1. Compressor Pump End 2. Compressor Seal End 3. Oil Cooler Manifold 4. Below Gageboard
04	NO. 2 REFR COND UNIT	1. Charging Valve 2. Drain Valve

E-3. REFR SPACES

RELAY DETAILS

Parameter	Relay 1	Relay 2	Relay 3	Relay 4
Operation	Continuous	Continuous	Continuous	Continuous
Mode	System	System	System	System
Logic	Any One	Any One	Any One	Any One
Pulse (m)	03	03	03	03
Inhibit (h)	00	00	00	00
Day Time (h)	06	06	06	06
Day Factor	2.8	2.8	2.8	2.8
Night Time (h)	18	18	18	18
Night Factor	2.8	2.8	2.8	2.8
SAMM 01	X	X	X	X
SAMM 02	X	X	X	X
SAMM 03	X	X	X	X
SAMM 04	NOT USED			

SAMM DETAILS

Address	Name	Alert	Alarm	Critical	Refrigerant	Cycle Time (mins)	Pipe Length (ft)
01	PASSAGEWAY 2-16-0-L	0050	0300	0850	R134A	010	0100
02	CHILL STRM	0050	0300	0850	R134A	010	0100
03	FREEZE STRM	0050	0300	0850	R134A	010	0100
04	NOT USED						

Recommended Sampling Locations for REFR SPACES

SAMM	Name	Sampling Locations
01	PASSAGEWAY 2-16-0-L	1. Filter Driers 2. Chill Strm TXV
02	CHILL STRM	1. Unit Cooler Outlet 2. 9” Above Deck Near Door
03	FREEZE STRM	1. Unit Cooler Outlet 2. 9” Above Deck Near Door
04	NOT USED	

APPENDIX F

(AS 39 CLASS)

F-1. AC PLANTS

RELAY DETAILS

Parameter	Relay 1	Relay 2	Relay 3	Relay 4
Operation	Continuous	Continuous	Continuous	Continuous
Mode	System	System	System	System
Logic	Any One	Any One	Any One	Any One
Pulse (m)	03	03	03	03
Inhibit (h)	00	00	00	00
Day Time (h)	06	06	06	06
Day Factor	2.8	2.8	2.8	2.8
Night Time (h)	18	18	18	18
Night Factor	2.8	2.8	2.8	2.8
SAMM 01	X	X	X	X
SAMM 02	X	X	X	X
SAMM 03	X	X	X	X
SAMM 04	X	X	X	X

SAMM DETAILS

Address	Name	Alert	Alarm	Critical	Refrigerant	Cycle Time (mins)	Pipe Length (ft)
01	NO. 1 AC PLANT	0050	0300	0850	R114 or R236FA	010	0100
02	NO. 2 AC PLANT	0050	0300	0850	R114 or R236FA	010	0100
03	NO. 3 AC PLANT	0050	0300	0850	R114 or R236FA	010	0100
04	NO. 1, 2, & 3 CWCV	0050	0300	0850	R114 or R236FA	010	0100

Recommended Sampling Locations for AC PLANTS

SAMM	Name	Sampling Locations
01	NO. 1 AC PLANT	1. Hot Gas Bypass 2. C/D Valve 3. Test Connections 4. Below Compressor
02	NO. 2 AC PLANT	1. Hot Gas Bypass 2. C/D Valve 3. Test Connections 4. Below Compressor
03	NO. 3 AC PLANT	1. Hot Gas Bypass 2. C/D Valve 3. Test Connections 4. Below Compressor
04	NO. 1, 2, & 3 CWCV	1. No. 1 AC Plant CWCV 2. No. 2 AC Plant CWCV 3. No. 3 AC Plant CWCV

F-2. REFER PLANTS

RELAY DETAILS

Parameter	Relay 1	Relay 2	Relay 3	Relay 4
Operation	Continuous	Continuous	Continuous	Continuous
Mode	System	System	System	System
Logic	Any One	Any One	Any One	Any One
Pulse (m)	03	03	03	03
Inhibit (h)	00	00	00	00
Day Time (h)	06	06	06	06
Day Factor	2.8	2.8	2.8	2.8
Night Time (h)	18	18	18	18
Night Factor	2.8	2.8	2.8	2.8
SAMM 01	X	X	X	X
SAMM 02	X	X	X	X
SAMM 03	X	X	X	X
SAMM 04	X	X	X	X

SAMM DETAILS

Address	Name	Alert	Alarm	Critical	Refrigerant	Cycle Time (mins)	Pipe Length (ft)
01	NO. 1 REFR PLANT	0050	0300	0850	R134A	010	0100
02	NO. 2 REFR PLANT	0050	0300	0850	R134A	010	0100
03	NO. 3 REFR PLANT	0050	0300	0850	R134A	010	0100
04	CONTROLS FOR CHILL STRM	0050	0300	0850	R134A	010	0100

Recommended Sampling Locations for REFR SPACES

SAMM	Name	Sampling Locations
01	NO. 1 REFR PLANT	1. Compressor Pump End 2. Compressor Seal End 3. Dehydrator/Charging Valve 4. Oil Cooler Manifold
02	NO. 2 REFR PLANT	1. Compressor Pump End 2. Compressor Seal End 3. Dehydrator/Charging Valve 4. Oil Cooler Manifold
03	NO. 3 REFR PLANT	1. Compressor Pump End 2. Compressor Seal End 3. Dehydrator/Charging Valve 4. Oil Cooler Manifold
04	CONTROLS FOR CHILL STRM	1. Strainer/Filter Drier 2. TXV Area 3. TXV Service Valve

F-3. REFR SPACES DECK 5

RELAY DETAILS

Parameter	Relay 1	Relay 2	Relay 3	Relay 4
Operation	Continuous	Continuous	Continuous	Continuous
Mode	System	System	System	System
Logic	Any One	Any One	Any One	Any One
Pulse (m)	03	03	03	03
Inhibit (h)	00	00	00	00
Day Time (h)	06	06	06	06
Day Factor	2.8	2.8	2.8	2.8
Night Time (h)	18	18	18	18
Night Factor	2.8	2.8	2.8	2.8
SAMM 01	X	X	X	X
SAMM 02	X	X	X	X
SAMM 03	X	X	X	X
SAMM 04	X	X	X	X

SAMM DETAILS

Address	Name	Alert	Alarm	Critical	Refrigerant	Cycle Time (mins)	Pipe Length (ft)
01	CONTROLS FOR FREEZE STRM 5-38-2-A IN PASSAGE-WAY 5-47-0-L	0050	0300	0850	R134A	010	0100
02	CONTROLS FOR FREEZE STRM 5-38-0-A IN PASSAGE-WAY 5-47-0-L	0050	0300	0850	R134A	010	0100
03	FREEZE STRM 5-38-0-A	0050	0300	0850	R134A	010	0100
04	FREEZE STRM 5-38-2-A	0050	0300	0850	R134A	010	0100

Recommended Sampling Locations for REFR SPACES DECK 5

SAMM	Name	Sampling Locations
01	CONTROLS FOR FREEZE STRM 5-38-2-A IN PASSAGE-WAY 5-47-0-L	1. Strainer/Filter Drier Area 2. TXV Area 3. TXV Service Valve Area
02	CONTROLS FOR FREEZE STRM 5-38-0-A IN PASSAGE-WAY 5-47-0-L	1. Strainer/Filter Drier Area 2. TXV Area 3. TXV Service Valve Area
03	FREEZE STRM 5-38-0-A	1. Ovhd Center at Frame 42 2. Ovhd Center at Frame 44-1/2 3. 9” Above Deck Near Door
04	FREEZE STRM 5-38-2-A	1. Ovhd Center 2. 9” Above Deck Near Door

F-4. REFR SPACES DECK 6

RELAY DETAILS

Parameter	Relay 1	Relay 2	Relay 3	Relay 4
Operation	Continuous	Continuous	Continuous	Continuous
Mode	System	System	System	System
Logic	Any One	Any One	Any One	Any One
Pulse (m)	03	03	03	03
Inhibit (h)	00	00	00	00
Day Time (h)	06	06	06	06
Day Factor	2.8	2.8	2.8	2.8
Night Time (h)	18	18	18	18
Night Factor	2.8	2.8	2.8	2.8
SAMM 01	X	X	X	X
SAMM 02	X	X	X	X
SAMM 03	X	X	X	X
SAMM 04	X	X	X	X
SAMM 05	X	X	X	X
SAMM 06	NOT USED			
SAMM 07	NOT USED			
SAMM 08	NOT USED			

SAMM DETAILS

Address	Name	Alert	Alarm	Critical	Refrigerant	Cycle Time (mins)	Pipe Length (ft)
01	CONTROLS FOR CHILL STRM 6-38-1-A IN PASSAGE-WAY 6-46-0-L	0050	0300	0850	R134A	010	0100
02	CONTROLS FOR WARD RM FREEZE STRM 6-46-1-A IN PASSAGEWAY 6-46-0-L	0050	0300	0850	R134A	010	0100
03	WARD RM FREEZE STRM	0050	0300	0850	R134A	010	0100
04	CHILL STRM 6-38-1-A	0050	0300	0850	R134A	010	0100
05	CHILL STRM 6-38-2-A	0050	0300	0850	R134A	010	0100
06	NOT USED						
07	NOT USED						
08	NOT USED						

Recommended Sampling Locations for REFR SPACES DECK 6

SAMM	Name	Sampling Locations
01	CONTROLS FOR CHILL STRM 6-38-1-A IN PASSAGE-WAY 6-46-0-L	1. Strainer/Filter Drier Area 2. TXV Area 3. TXV Service Valve Area
02	CONTROLS FOR WARD RM FREEZE STRM 6-46-1-A IN PASSAGEWAY 6-46-0-L	1. Strainer/Filter Drier Area 2. TXV Area 3. TXV Service Valve Area
03	WARD RM FREEZE STRM	1. Ovhd Center 2. 9” Above Deck Near Door
04	CHILL STRM 6-38-1-A	1. Ovhd Center at Frame 43 2. Ovhd Center, Aft Stbd Corner 3. 9” Above Deck Near Door
05	CHILL STRM 6-38-2-A	1. Ovhd Center 2. 9” Above Deck Near Door
06	NOT USED	
07	NOT USED	
08	NOT USED	

APPENDIX G

(CG 47 CLASS)

G-1. NO. 1 AMR

RELAY DETAILS

Parameter	Relay 1	Relay 2	Relay 3	Relay 4
Operation	Continuous	Continuous	Continuous	Continuous
Mode	System	Group	System	Group
Logic	Any One	Any One	Any One	Any One
Pulse (m)	03	03	03	03
Inhibit (h)	00	00	00	00
Day Time (h)	06	06	06	06
Day Factor	2.8	2.8	2.8	2.8
Night Time (h)	18	18	18	18
Night Factor	2.8	2.8	2.8	2.8
SAMM 01	X	X	X	
SAMM 02	X	X	X	
SAMM 03	X	X	X	
SAMM 04	X	X	X	
SAMM 05	X		X	X
SAMM 06	X		X	X
SAMM 07	X		X	X
SAMM 08	X		X	X

SAMM DETAILS

Address	Name	Alert	Alarm	Critical	Refrigerant	Cycle Time (mins)	Pipe Length (ft)
01	NO. 1 AC PLANT	0050	0300	0850	R114 or R236FA	010	0100
02	NO. 2 AC PLANT	0050	0300	0850	R114 or R236FA	010	0100
03	NO. 1 REFR PLANT	0050	0300	0850	R134A	010	0100
04	NO. 2 REFR PLANT	0050	0300	0850	R134A	010	0100
05	FREEZE STRM	0050	0300	0850	R134A	010	0100
06	NO. 1 CHILL STRM	0050	0300	0850	R134A	010	0100
07	NO. 2 CHILL STRM	0050	0300	0850	R134A	010	0100
08	STORES LANDING AREA	0050	0300	0850	R134A	010	0100

Recommended Sampling Locations for NO. 1 AMR

SAMM	Name	Sampling Locations
01	NO. 1 AC PLANT	1. CWCV 2. Below Compressor 3. Test Connections 4. Between Hot Gas Bypass and C/D Valves
02	NO. 2 AC PLANT	1. CWCV 2. Below Compressor 3. Test Connections 4. Between Hot Gas Bypass and C/D Valves
03	NO. 1 REFR PLANT	1. Near Discharge Flex Hoses 2. Below Shaft Seal 3. C/D Valve 4. Control Panel
04	NO. 2 REFR PLANT	1. Near Discharge Flex Hoses 2. Below Shaft Seal 3. C/D Valve 4. Control Panel
05	FREEZE STRM	1. Ovhd Center 2. 9” Above Deck Near Door
06	NO. 1 CHILL STRM	1. Ovhd Center 2. 9” Above Deck Near Door
07	NO. 2 CHILL STRM	1. Ovhd Center 2. 9” Above Deck Near Door
08	STORES LANDING AREA	1. Controls For Freeze Strm 2. Controls for No. 1 Chill Strm 3. Controls for No. 2 Chill Strm 4. Near Exhaust Duct

G-2. NO. 2 PUMP RM AND AC MACH RM

RELAY DETAILS

Parameter	Relay 1	Relay 2	Relay 3	Relay 4
Operation	Continuous	Continuous	Continuous	Continuous
Mode	System	System	System	System
Logic	Any One	Any One	Any One	Any One
Pulse (m)	03	03	03	03
Inhibit (h)	00	00	00	00
Day Time (h)	06	06	06	06
Day Factor	2.8	2.8	2.8	2.8
Night Time (h)	18	18	18	18
Night Factor	2.8	2.8	2.8	2.8
SAMM 01	X	X	X	X
SAMM 02	X	X	X	X
SAMM 03	X	X	X	X
SAMM 04	X	X	X	X

SAMM DETAILS

Address	Name	Alert	Alarm	Critical	Refrigerant	Cycle Time (mins)	Pipe Length (ft)
01	NO. 3 AC PLANT BACK	0050	0300	0850	R114 or R236FA	010	0100
02	NO. 3 AC PLANT FRONT	0050	0300	0850	R114 or R236FA	010	0100
03	NO. 4 AC PLANT FRONT	0050	0300	0850	R114 or R236FA	010	0100
04	NO. 4 AC PLANT BACK	0050	0300	0850	R114 or R236FA	010	0100

Recommended Sampling Locations for NO. 2 PUMP RM AND AC MACH RM

SAMM	Name	Sampling Locations
01	NO. 3 AC PLANT BACK	1. CWCV 2. Chiller Bottom 3. Below Compressor
02	NO. 3 AC PLANT FRONT	1. Hot Gas Bypass 2. Test Connections 3. C/D Valve
03	NO. 4 AC PLANT FRONT	1. Hot Gas Bypass 2. Test Connections 3. C/D Valve
04	NO. 4 AC PLANT BACK	1. CWCV 2. Chiller Bottom 3. Below Compressor

APPENDIX H

(CV/CVN)

SECTION H1

(CV 63)

H1-1. 4TH DECK REFRIGERATED SPACES

RELAY DETAILS

Parameter	Relay 1	Relay 2	Relay 3	Relay 4
Operation	Continuous	Continuous	Continuous	Continuous
Mode	System	System	System	System
Logic	Any One	Any One	Any One	Any One
Pulse (m)	03	03	03	03
Inhibit (h)	00	00	00	00
Day Time (h)	06	06	06	06
Day Factor	2.8	2.8	2.8	2.8
Night Time (h)	18	18	18	18
Night Factor	2.8	2.8	2.8	2.8
SAMM 01	X	X	X	X
SAMM 02	X	X	X	X
SAMM 03	X	X	X	X
SAMM 04	X	X	X	X
SAMM 05	X	X	X	X
SAMM 06	X	X	X	X
SAMM 07	X	X	X	X
SAMM 08	X	X	X	X

SAMM DETAILS

Address	Name	Alert	Alarm	Critical	Refrigerant	Cycle Time (mins)	Pipe Length (ft)
01	NO. 1 FROZEN STRM	0050	0300	0850	R134A	010	0100
02	VESTIBULE 4-43-2	0050	0300	0850	R134A	010	0100
03	NO. 2 CHILLED STRM	0050	0300	0850	R134A	010	0100
04	PASSAGEWAY 4-39-2-L	0050	0300	0850	R134A	010	0100
05	NO. 3 FROZEN STRM	0050	0300	0850	R134A	010	0100
06	PASSAGEWAY 4-39-2-L	0050	0300	0850	R134A	010	0100
07	NO. 5 FROZEN STRM	0050	0300	0850	R134A	010	0100
08	PASSAGEWAY 4-39-2-L	0050	0300	0850	R134A	010	0100

Recommended Sampling Locations for 4TH DECK REFRIGERATED SPACES

SAMM	Name	Sampling Locations
01	NO. 1 FROZEN STRM	1. 9” Above Deck Near Door 2. Ovhd Aft Stbd Corner 3. Ovhd Fwd Stbd Corner 4. Ovhd Center
02	VESTIBULE 4-43-2	1. Corner Near Box 1 Door 2. Corner Near Door 4-32-2
03	NO. 2 CHILLED STRM	1. 9” Above Deck Near Door 2. Aft Bulkhead 3. Ovhd Center
04	PASSAGEWAY 4-39-2-L	1. Box 4 filter/drier and TXV 2. Box 3 Filter/Drier Drip Pan 3. Box 2 Filter/Drier Drip Pan Fwd 4. Box 2 Filter/Drier Drip Pan Aft
05	NO. 3 FROZEN STRM	1. 9” Above Deck Near Door 2. Fwd Stbd Corner 3. Fwd Port Corner
06	PASSAGEWAY 4-39-2-L	1. Box 5 Filter/Drier (Lower Set) 2. Box 5 Filter/Drier (Middle Set) 3. Box 5 Filter/Drier (Upper Set) 4. Test Connection Board
07	NO. 5 FROZEN STRM	1. 9” Above Deck Near Door 2. Aft Stbd Corner 3. Aft Port Corner 4. Mid Compartment
08	PASSAGEWAY 4-39-2-L	1. Box 1 Filter/Drier (Upper Set) 2. Box 1 Filter/Drier (Lower Set) 3. Drip Pan for Box 1 Test Connection 4. 9” Above Deck at Base of Ladder

H1-2. 5TH DECK REFRIGERATED SPACES NO. 10, 11, & 12

RELAY DETAILS

Parameter	Relay 1	Relay 2	Relay 3	Relay 4
Operation	Continuous	Continuous	Continuous	Continuous
Mode	System	System	System	System
Logic	Any One	Any One	Any One	Any One
Pulse (m)	03	03	03	03
Inhibit (h)	00	00	00	00
Day Time (h)	06	06	06	06
Day Factor	2.8	2.8	2.8	2.8
Night Time (h)	18	18	18	18
Night Factor	2.8	2.8	2.8	2.8
SAMM 01	X	X	X	X
SAMM 02	X	X	X	X
SAMM 03	X	X	X	X
SAMM 04	X	X	X	X
SAMM 05	X	X	X	X
SAMM 06	X	X	X	X
SAMM 07	X	X	X	X
SAMM 08	X	X	X	X

SAMM DETAILS

Address	Name	Alert	Alarm	Critical	Refrigerant	Cycle Time (mins)	Pipe Length (ft)
01	NO. 12 CHILLED STRM	0050	0300	0850	R134A	010	0100
02	PASSAGEWAY 5-200-4-L	0050	0300	0850	R134A	010	0100
03	NO. 10 CHILLED STRM	0050	0300	0850	R134A	010	0100
04	PASSAGEWAY 5-200-4-L	0050	0300	0850	R134A	010	0100
05	VESTIBULE 5-200-0-L	0050	0300	0850	R134A	010	0100
06	PASSAGEWAY 5-200-4-L	0050	0300	0850	R134A	010	0100
07	NO. 11 PHOTO STRM	0050	0300	0850	R134A	010	0100
08	PASSAGEWAY 5-200-4-L	0050	0300	0850	R134A	010	0100

Recommended Sampling Locations for 5TH DECK REFRIGERATED SPACES NO. 10, 11, & 12

SAMM	Name	Sampling Locations
01	NO. 12 CHILLED STRM	1. 9” Above Deck Near Door 2. Ovhd Aft Stbd Corner 3. Ovhd Fwd Stbd Corner 4. Ovhd Mid Compartment
02	PASSAGEWAY 5-200-4-L	1. Filter/Drier Marked 12 2. Filter/Drier to the Left of Box 11 Door 3. Filter/Drier Marked 10 4. Filter/Drier Marked 11
03	NO. 10 CHILLED STRM	1. 9” Above Deck Near Door 2. Ovhd Fwd Stbd Corner 3. Ovhd Mid Compartment 4. Ovhd Fwd Port Corner
04	PASSAGEWAY 5-200-4-L	1. Filter/Drier Marked 9 2. Filter/Drier Marked 8 3. Filter/Drier Marked 7 4. Filter/Drier Marked 6
05	VESTIBULE 5-200-0-L	1. 9” Above Deck Near Door 2. Fwd Port Bulkhead 3. Filter/Drier Marked Box 13 4. Box 13 Drip Pan Below EPR
06	PASSAGEWAY 5-200-4-L	1. Filter/Drier Marked 5 2. Filter/Drier Marked 4 3. Filter/Drier Marked 3 4. Filter/Drier Marked 2
07	NO. 11 PHOTO STRM	1. 9” Above Deck Near Door 2. Ovhd Aft Port Corner 3. Ovhd Aft Stbd Corner
08	PASSAGEWAY 5-200-4-L	1. Filter/Drier Marked 1 2. Valve Manifold in Ovhd 3. 9” Above Deck Below Filter/Drier Manifold

H1-3. 5TH DECK REFRIGERATED STRMS NO. 13 & 14

RELAY DETAILS

Parameter	Relay 1	Relay 2	Relay 3	Relay 4
Operation	Continuous	Continuous	Continuous	Continuous
Mode	System	System	System	System
Logic	Any One	Any One	Any One	Any One
Pulse (m)	03	03	03	03
Inhibit (h)	00	00	00	00
Day Time (h)	06	06	06	06
Day Factor	2.8	2.8	2.8	2.8
Night Time (h)	18	18	18	18
Night Factor	2.8	2.8	2.8	2.8
SAMM 01	X	X	X	X
SAMM 02	X	X	X	X
SAMM 03	X	X	X	X
SAMM 04	X	X	X	X
SAMM 05	X	X	X	X
SAMM 06	X	X	X	X
SAMM 07	X	X	X	X
SAMM 08	X	X	X	X

SAMM DETAILS

Address	Name	Alert	Alarm	Critical	Refrigerant	Cycle Time (mins)	Pipe Length (ft)
01	NO. 14 CHILLED STRM	0050	0300	0850	R134A	010	0100
02	VESTIBULE 5-208-4-A	0050	0300	0850	R134A	010	0100
03	NO. 13 CHILLED STRM	0050	0300	0850	R134A	010	0100
04	PASSAGEWAY AFT MANI-FOLD 5-205-4-L	0050	0300	0850	R134A	010	0100
05	NO. 14 CHILLED STRM	0050	0300	0850	R134A	010	0100
06	PASSAGEWAY FWD MANI-FOLD 5-205-4-L	0050	0300	0850	R134A	010	0100
07	NO. 13 CHILLED STRM	0050	0300	0850	R134A	010	0100
08	PASSAGEWAY FWD MANI-FOLD 5-205-4-L	0050	0300	0850	R134A	010	0100

Recommended Sampling Locations for 5TH DECK REFRIGERATED SPACES NO. 13 & 14

SAMM	Name	Sampling Locations
01	NO. 14 CHILLED STRM	1. 9” Above Deck Near Door 2. Ovhd Aft Stbd Corner
02	VESTIBULE 5-208-4-A	1. 9” Above Deck 2. Fwd Bulkhead
03	NO. 13 CHILLED STRM	1. 9” Above Deck Near Door 2. Ovhd Aft Stbd Corner
04	PASSAGEWAY AFT MANI-FOLD 5-205-4-L	1. Filter/Drier Marked 1 2. Filter/Drier Marked 2 3. Filter/Drier Marked 3 4. Filter/Drier Marked 4
05	NO. 14 CHILLED STRM	1. Ovhd Mid Compartment 2. Ovhd Fwd Stbd Corner
06	PASSAGEWAY FWD MANI-FOLD 5-205-4-L	1. Valve Manifold Above Vestibule Door 2. 9” Above Deck Outside Vestibule Door 3. Filter/Drier Marked 1 4. Filter/Drier Marked 2
07	NO. 13 CHILLED STRM	1. Ovhd Mid Compartment 2. Ovhd Aft Port Corner
08	PASSAGEWAY FWD MANI-FOLD 5-205-4-L	1. Filter/Drier Marked 3 2. Filter/Drier Marked 4 3. Filter/Drier Marked 5 4. Filter/Drier Marked 6

H1-4. NO. 7 FROZEN STORES

RELAY DETAILS

Parameter	Relay 1	Relay 2	Relay 3	Relay 4
Operation	Continuous	Continuous	Continuous	Continuous
Mode	System	System	System	System
Logic	Any One	Any One	Any One	Any One
Pulse (m)	03	03	03	03
Inhibit (h)	00	00	00	00
Day Time (h)	06	06	06	06
Day Factor	2.8	2.8	2.8	2.8
Night Time (h)	18	18	18	18
Night Factor	2.8	2.8	2.8	2.8
SAMM 01	X	X	X	X
SAMM 02	X	X	X	X
SAMM 03	NOT USED			
SAMM 04	NOT USED			

SAMM DETAILS

Address	Name	Alert	Alarm	Critical	Refrigerant	Cycle Time (mins)	Pipe Length (ft)
01	NO. 7 FROZEN STRM	0050	0300	0850	R134A	010	0100
02	PASSAGEWAY 5-39-2-L	0050	0300	0850	R134A	010	0100
03	NOT USED						
04	NOT USED						

Recommended Sampling Locations for NO. 7 FROZEN STORES

SAMM	Name	Sampling Locations
01	NO. 7 FROZEN STRM	1. 9” Above Deck Near Door 2. Bulkhead Opposite Door 3. Ovhd Mid Compartment 4. Vestibule, Either Side, 9” Above Deck
02	PASSAGEWAY 5-39-2-L	1. Drip Pan Below Box 6 Strainers 2. Drip Pan Below Box 7 Strainers 3. Box Cutout Valves Drip Pan 4. 9” Above Deck at Bottom of Ladder
03	Not Used	
04	Not Used	

H1-5. AC PLANT NO. 1 & FWD REFR PLANTS

RELAY DETAILS

Parameter	Relay 1	Relay 2	Relay 3	Relay 4
Operation	Continuous	Continuous	Continuous	Continuous
Mode	System	System	System	System
Logic	Any One	Any One	Any One	Any One
Pulse (m)	03	03	03	03
Inhibit (h)	00	00	00	00
Day Time (h)	06	06	06	06
Day Factor	2.8	2.8	2.8	2.8
Night Time (h)	18	18	18	18
Night Factor	2.8	2.8	2.8	2.8
SAMM 01	X	X	X	X
SAMM 02	X	X	X	X
SAMM 03	X	X	X	X
SAMM 04	X	X	X	X
SAMM 05	X	X	X	X
SAMM 06	X	X	X	X
SAMM 07	X	X	X	X
SAMM 08	X	X	X	X

SAMM DETAILS

Address	Name	Alert	Alarm	Critical	Refrigerant	Cycle Time (mins)	Pipe Length (ft)
01	NO. 1 AC PLANT FRONT	0050	0300	0850	R114 or R236FA	010	0100
02	NO. 1 AC PLANT BACK	0050	0300	0850	R114 or R236FA	010	0100
03	NO. 4 REFR COMP	0050	0300	0850	R134A	010	0100
04	NO. 4 REFR COND UNIT	0050	0300	0850	R134A	010	0100
05	NO. 5 REFR COMP	0050	0300	0850	R134A	010	0100
06	NO. 5 REFR COND UNIT	0050	0300	0850	R134A	010	0100
07	REMOTE RECEIVER	0050	0300	0850	R114 or R236FA	010	0100
08	NO. 1 CWCV	0050	0300	0850	R114 or R236FA	010	0100

Recommended Sampling Locations for AC PLANT NO. 1 AND FWD REFR PLANTS

SAMM	Name	Sampling Locations
01	NO. 1 AC PLANT FRONT	1. Test Connections 2. Below Compressor 3. Below Chiller
02	NO. 1 AC PLANT BACK	1. Below Chiller Drain Valve 2. Hot Gas Bypass Valve (Fwd) 3. Hot Gas Bypass Valve (Aft)
03	NO. 4 REFR COMP	1. Below Compressor Shaft Seal 2. Gage Test Connections
04	NO. 4 COND UNIT	1. Dehydrator and Solenoid 2. Below Receiver 3. Purge Valve Area
05	NO. 5 REFR COMP	1. Below Compressor Shaft Seal 2. Gage Test Connections
06	NO. 5 COND UNIT	1. Dehydrator and Solenoid 2. Below Receiver 3. Purge Valve Area
07	REMOTE RECEIVER	1. Drain Valve
08	NO. 1 CWCV	1. CWCV

H1-6. AC PLANT NO. 2

RELAY DETAILS

Parameter	Relay 1	Relay 2	Relay 3	Relay 4
Operation	Continuous	Continuous	Continuous	Continuous
Mode	System	System	System	System
Logic	Any One	Any One	Any One	Any One
Pulse (m)	03	03	03	03
Inhibit (h)	00	00	00	00
Day Time (h)	06	06	06	06
Day Factor	2.8	2.8	2.8	2.8
Night Time (h)	18	18	18	18
Night Factor	2.8	2.8	2.8	2.8
SAMM 01	X	X	X	X
SAMM 02	X	X	X	X
SAMM 03	X	X	X	X
SAMM 04	X	X	X	X

SAMM DETAILS

Address	Name	Alert	Alarm	Critical	Refrigerant	Cycle Time (mins)	Pipe Length (ft)
01	NO. 2 AC PLANT FRONT	0050	0300	0850	R114 or R236FA	010	0100
02	NO. 2 AC PLANT BACK	0050	0300	0850	R114 or R236FA	010	0100
03	REMOTE RECEIVER	0050	0300	0850	R114 or R236FA	010	0100
04	NO. 2 CWCV	0050	0300	0850	R114 or R236FA	010	0100

Recommended Sampling Locations for AC PLANT NO. 2

SAMM	Name	Sampling Locations
01	NO. 2 AC PLANT FRONT	1. Test Connections 2. Below Compressor 3. Below Chiller
02	NO. 2 AC PLANT BACK	1. Below Chiller Drain Valve 2. Hot Gas Bypass Valve (Fwd) 3. Hot Gas Bypass Valve (Aft)
03	REMOTE RECEIVER	1. Drain Valve
04	NO. 2 CWCV	1. CWCV

H1-7. AC PLANTS NO. 3 & 4

RELAY DETAILS

Parameter	Relay 1	Relay 2	Relay 3	Relay 4
Operation	Continuous	Continuous	Continuous	Continuous
Mode	System	System	System	System
Logic	Any One	Any One	Any One	Any One
Pulse (m)	03	03	03	03
Inhibit (h)	00	00	00	00
Day Time (h)	06	06	06	06
Day Factor	2.8	2.8	2.8	2.8
Night Time (h)	18	18	18	18
Night Factor	2.8	2.8	2.8	2.8
SAMM 01	X	X	X	X
SAMM 02	X	X	X	X
SAMM 03	X	X	X	X
SAMM 04	X	X	X	X

SAMM DETAILS

Address	Name	Alert	Alarm	Critical	Refrigerant	Cycle Time (mins)	Pipe Length (ft)
01	NO. 3 AC PLANT FRONT	0050	0300	0850	R114 or R236FA	010	0100
02	NO. 3 AC PLANT BACK	0050	0300	0850	R114 or R236FA	010	0100
03	NO. 4 AC PLANT FRONT	0050	0300	0850	R114 or R236FA	010	0100
04	NO. 4 AC PLANT BACK	0050	0300	0850	R114 or R236FA	010	0100

Recommended Sampling Locations for AC PLANTS NO. 3 & 4

SAMM	Name	Sampling Locations
01	NO. 3 AC PLANT FRONT	1. Test Connections 2. Below Compressor 3. Below Chiller 4. CWCV/PPO
02	NO. 3 AC PLANT BACK	1. Below Chiller Drain Valve 2. Hot Gas Bypass Valve (Fwd) 3. Hot Gas Bypass Valve (Aft)
03	NO. 4 AC PLANT FRONT	1. Test Connections 2. Below Compressor 3. Below Chiller 4. CWCV/PPO
04	NO. 4 AC PLANT BACK	1. Below Chiller Drain Valve 2. Hot Gas Bypass Valve (Fwd) 3. Hot Gas Bypass Valve (Aft)

H1-8. AC PLANT NO. 5 AND AFT REFR PLANTS

RELAY DETAILS

Parameter	Relay 1	Relay 2	Relay 3	Relay 4
Operation	Continuous	Continuous	Continuous	Continuous
Mode	System	System	System	System
Logic	Any One	Any One	Any One	Any One
Pulse (m)	03	03	03	03
Inhibit (h)	00	00	00	00
Day Time (h)	06	06	06	06
Day Factor	2.8	2.8	2.8	2.8
Night Time (h)	18	18	18	18
Night Factor	2.8	2.8	2.8	2.8
SAMM 01	X	X	X	X
SAMM 02	X	X	X	X
SAMM 03	X	X	X	X
SAMM 04	X	X	X	X
SAMM 05	X	X	X	X
SAMM 06	X	X	X	X
SAMM 07	X	X	X	X
SAMM 08	X	X	X	X

SAMM DETAILS

Address	Name	Alert	Alarm	Critical	Refrigerant	Cycle Time (mins)	Pipe Length (ft)
01	NO. 5 AC PLANT FRONT	0050	0300	0850	R114 or R236FA	010	0100
02	NO. 5 AC PLANT BACK	0050	0300	0850	R114 or R236FA	010	0100
03	NO. 1 REFR COMP	0050	0300	0850	R134A	010	0100
04	NO. 1 COND UNIT	0050	0300	0850	R134A	010	0100
05	NO. 2 REFR COMP	0050	0300	0850	R134A	010	0100
06	NO. 2 COND UNIT	0050	0300	0850	R134A	010	0100
07	NO. 3 REFR COMP	0050	0300	0850	R134A	010	0100
08	NO. 3 COND UNIT	0050	0300	0850	R134A	010	0100

Recommended Sampling Locations for AC PLANT NO. 5 AND AFT REFR PLANTS

SAMM	Name	Sampling Locations
01	NO. 5 AC PLANT FRONT	1. Test Connections 2. Below Compressor 3. Below Chiller 4. CWCV/PPO
02	NO. 5 AC PLANT BACK	1. Below Chiller Drain Valve 2. Hot Gas Bypass Valve (Fwd) 3. Hot Gas Bypass Valve (Aft)
03	NO. 1 REFR COMP	1. Below Compressor Shaft Seal 2. Gage Test Connections
04	NO. 1 COND UNIT	1. Dehydrator and Solenoid 2. Below Receiver 3. Purge Valve Area
05	NO. 2 REFR COMP	1. Below Compressor Shaft Seal 2. Gage Test Connections
06	NO. 2 COND UNIT	1. Dehydrator and Solenoid 2. Below Receiver 3. Purge Valve Area
07	NO. 3 REFR COMP	1. Below Compressor Shaft Seal 2. Gage Test Connections
08	NO. 3 COND UNIT	1. Dehydrator and Solenoid 2. Below Receiver 3. Purge Valve Area

H1-9. AC PLANT NO. 6

RELAY DETAILS

Parameter	Relay 1	Relay 2	Relay 3	Relay 4
Operation	Continuous	Continuous	Continuous	Continuous
Mode	System	System	System	System
Logic	Any One	Any One	Any One	Any One
Pulse (m)	03	03	03	03
Inhibit (h)	00	00	00	00
Day Time (h)	06	06	06	06
Day Factor	2.8	2.8	2.8	2.8
Night Time (h)	18	18	18	18
Night Factor	2.8	2.8	2.8	2.8
SAMM 01	X	X	X	X
SAMM 02	X	X	X	X
SAMM 03	X	X	X	X
SAMM 04	X	X	X	X

SAMM DETAILS

Address	Name	Alert	Alarm	Critical	Refrigerant	Cycle Time (mins)	Pipe Length (ft)
01	NO. 6 AC PLANT FRONT	0050	0300	0850	R114 or R236FA	010	0100
02	NO. 6 AC PLANT BACK	0050	0300	0850	R114 or R236FA	010	0100
03	REMOTE RECEIVER	0050	0300	0850	R114 or R236FA	010	0100
04	NO. 6 CWCV	0050	0300	0850	R114 or R236FA	010	0100

Recommended Sampling Locations for AC PLANT NO. 6

SAMM	Name	Sampling Locations
01	NO. 6 AC PLANT FRONT	1. Test Connections 2. Below Compressor 3. Below Chiller 4. PPO Unit
02	NO. 6 AC PLANT BACK	1. Below Chiller Drain Valve 2. Hot Gas Bypass Valve (Fwd) 3. Hot Gas Bypass Valve (Aft)
03	REMOTE RECEIVER	1. Drain Valve
04	NO. 6 CWCV	1. CWCV

H1-10. AC PLANT NO. 7

RELAY DETAILS

Parameter	Relay 1	Relay 2	Relay 3	Relay 4
Operation	Continuous	Continuous	Continuous	Continuous
Mode	System	System	System	System
Logic	Any One	Any One	Any One	Any One
Pulse (m)	03	03	03	03
Inhibit (h)	00	00	00	00
Day Time (h)	06	06	06	06
Day Factor	2.8	2.8	2.8	2.8
Night Time (h)	18	18	18	18
Night Factor	2.8	2.8	2.8	2.8
SAMM 01	X	X	X	X
SAMM 02	X	X	X	X
SAMM 03	X	X	X	X
SAMM 04	X	X	X	X

SAMM DETAILS

Address	Name	Alert	Alarm	Critical	Refrigerant	Cycle Time (mins)	Pipe Length (ft)
01	NO. 7 AC PLANT FRONT	0050	0300	0850	R114 or R236FA	010	0100
02	NO. 7 AC PLANT BACK	0050	0300	0850	R114 or R236FA	010	0100
03	REMOTE RECEIVER	0050	0300	0850	R114 or R236FA	010	0100
04	EXHAUST VENT	0050	0300	0850	R114 or R236FA	010	0100

Recommended Sampling Locations for AC PLANT NO. 7

SAMM	Name	Sampling Locations
01	NO. 7 AC PLANT FRONT	1. Test Connections 2. Below Compressor 3. Below Chiller 4. PPO Unit
02	NO. 7 AC PLANT BACK	1. Below Chiller Drain Valve 2. Hot Gas Bypass Valve (Fwd) 3. Hot Gas Bypass Valve (Aft)
03	REMOTE RECEIVER	1. Drain Valve
04	EXHAUST VENT	1. Exhaust Vent

H1-11. AC PLANT NO. 13

RELAY DETAILS

Parameter	Relay 1	Relay 2	Relay 3	Relay 4
Operation	Continuous	Continuous	Continuous	Continuous
Mode	System	System	System	System
Logic	Any One	Any One	Any One	Any One
Pulse (m)	03	03	03	03
Inhibit (h)	00	00	00	00
Day Time (h)	06	06	06	06
Day Factor	2.8	2.8	2.8	2.8
Night Time (h)	18	18	18	18
Night Factor	2.8	2.8	2.8	2.8
SAMM 01	X	X	X	X
SAMM 02	X	X	X	X
SAMM 03	X	X	X	X
SAMM 04	X	X	X	X

SAMM DETAILS

Address	Name	Alert	Alarm	Critical	Refrigerant	Cycle Time (mins)	Pipe Length (ft)
01	NO. 13 AC PLANT FRONT	0050	0300	0850	R114 or R236FA	010	0100
02	NO. 13 AC PLANT BACK	0050	0300	0850	R114 or R236FA	010	0100
03	REMOTE RECEIVER	0050	0300	0850	R114 or R236FA	010	0100
04	NO. 13 CWCV	0050	0300	0850	R114 or R236FA	010	0100

Recommended Sampling Locations for AC PLANT NO. 13

SAMM	Name	Sampling Locations
01	NO. 13 AC PLANT FRONT	1. Test Connections 2. Below Compressor 3. Below Chiller 4. PPO Unit
02	NO. 13 AC PLANT BACK	1. Below Chiller Drain Valve 2. Hot Gas Bypass Valve (Fwd) 3. Hot Gas Bypass Valve (Aft)
03	REMOTE RECEIVER	1. Drain Valve
04	NO. 13 CWCV	1. CWCV

H1-12. CHILL STRM NO. 8

RELAY DETAILS

Parameter	Relay 1	Relay 2	Relay 3	Relay 4
Operation	Continuous	Continuous	Continuous	Continuous
Mode	System	System	System	System
Logic	Any One	Any One	Any One	Any One
Pulse (m)	03	03	03	03
Inhibit (h)	00	00	00	00
Day Time (h)	06	06	06	06
Day Factor	2.8	2.8	2.8	2.8
Night Time (h)	18	18	18	18
Night Factor	2.8	2.8	2.8	2.8
SAMM 01	X	X	X	X
SAMM 02	X	X	X	X
SAMM 03	X	X	X	X
SAMM 04	X	X	X	X

SAMM DETAILS

Address	Name	Alert	Alarm	Critical	Refrigerant	Cycle Time (mins)	Pipe Length (ft)
01	NO. 8 CHILLED STRM	0050	0300	0850	R134A	010	0100
02	FWD VEGETABLE PREP RM	0050	0300	0850	R134A	010	0100
03	NO. 8 CHILLED STRM	0050	0300	0850	R134A	010	0100
04	FWD VEGETABLE PREP RM	0050	0300	0850	R134A	010	0100

Recommended Sampling Locations for CHILL STRM NO. 8

SAMM	Name	Sampling Locations
01	NO. 8 CHILLED STRM	1. 9” Above Deck Near Door 2. Ovhd Aft Outboard Corner
02	FWD VEGETABLE PREP RM	1. Filter Drier Liquid Line 2. TXV
03	NO. 8 CHILLED STRM	1. Ovhd Fwd Outboard Corner 2. Ovhd Center
04	FWD VEGETABLE PREP RM	1. Below Valve Manifold 2. 9” Above Deck

H1-13. CHILL STRM NO. 9

RELAY DETAILS

Parameter	Relay 1	Relay 2	Relay 3	Relay 4
Operation	Continuous	Continuous	Continuous	Continuous
Mode	System	System	System	System
Logic	Any One	Any One	Any One	Any One
Pulse (m)	03	03	03	03
Inhibit (h)	00	00	00	00
Day Time (h)	06	06	06	06
Day Factor	2.8	2.8	2.8	2.8
Night Time (h)	18	18	18	18
Night Factor	2.8	2.8	2.8	2.8
SAMM 01	X	X	X	X
SAMM 02	X	X	X	X
SAMM 03	X	X	X	X
SAMM 04	X	X	X	X

SAMM DETAILS

Address	Name	Alert	Alarm	Critical	Refrigerant	Cycle Time (mins)	Pipe Length (ft)
01	NO. 9 CHILLED STRM	0050	0300	0850	R134A	010	0100
02	PASSAGEWAY 2-195-2-L	0050	0300	0850	R134A	010	0100
03	NO. 9 CHILLED STRM	0050	0300	0850	R134A	010	0100
04	PASSAGEWAY 2-195-2-L	0050	0300	0850	R134A	010	0100

Recommended Sampling Locations for CHILL STRM NO. 9

SAMM	Name	Sampling Locations
01	NO. 9 CHILLED STRM	1. 9” Above Deck Near Door 2. Ovhd Aft Outboard Corner
02	PASSAGEWAY 2-195-2-L	1. Filter Drier Liquid Line 2. TXV
03	NO. 9 CHILLED STRM	1. Ovhd Fwd Outboard Corner 2. Ovhd Center
04	PASSAGEWAY 2-195-2-L	1. Below Valve Manifold 2. 9” Above Deck

SECTION H2

(CV 67)

H2-1. AC PLANTS NO. 1 & 2

RELAY DETAILS

Parameter	Relay 1	Relay 2	Relay 3	Relay 4
Operation	Continuous	Continuous	Continuous	Continuous
Mode	System	System	System	System
Logic	Any One	Any One	Any One	Any One
Pulse (m)	03	03	03	03
Inhibit (h)	00	00	00	00
Day Time (h)	06	06	06	06
Day Factor	2.8	2.8	2.8	2.8
Night Time (h)	18	18	18	18
Night Factor	2.8	2.8	2.8	2.8
SAMM 01	X	X	X	X
SAMM 02	X	X	X	X
SAMM 03	X	X	X	X
SAMM 04	X	X	X	X

SAMM DETAILS

Address	Name	Alert	Alarm	Critical	Refrigerant	Cycle Time (mins)	Pipe Length (ft)
01	NO. 1 AC PLANT FRONT	0050	0300	0850	R114 or R236FA	010	0100
02	NO. 1 AC PLANT BACK	0050	0300	0850	R114 or R236FA	010	0100
03	NO. 2 AC PLANT FRONT	0050	0300	0850	R114 or R236FA	010	0100
04	NO. 2 AC PLANT BACK	0050	0300	0850	R114 or R236FA	010	0100

Recommended Sampling Locations for AC PLANTS NO. 1 & 2

SAMM	Name	Sampling Locations
01	NO. 1 AC PLANT FRONT	1. Test Connections 2. Below Compressor 3. Below Chiller 4. Receiver C/D Valve
02	NO. 1 AC PLANT BACK	1. Below Chiller Drain Valve 2. Hot Gas Bypass Valve (Fwd) 3. Hot Gas Bypass Valve (Aft) 4. CWCV
03	NO. 2 AC PLANT FRONT	1. Test Connections 2. Below Compressor 3. Below Chiller
04	NO. 2 AC PLANT BACK	1. Below Chiller Drain Valve 2. Hot Gas Bypass Valve (Fwd) 3. Hot Gas Bypass Valve (Aft) 4. CWCV

H2-2. AC PLANTS NO. 3 & 4

RELAY DETAILS

Parameter	Relay 1	Relay 2	Relay 3	Relay 4
Operation	Continuous	Continuous	Continuous	Continuous
Mode	System	System	System	System
Logic	Any One	Any One	Any One	Any One
Pulse (m)	03	03	03	03
Inhibit (h)	00	00	00	00
Day Time (h)	06	06	06	06
Day Factor	2.8	2.8	2.8	2.8
Night Time (h)	18	18	18	18
Night Factor	2.8	2.8	2.8	2.8
SAMM 01	X	X	X	X
SAMM 02	X	X	X	X
SAMM 03	X	X	X	X
SAMM 04	X	X	X	X

SAMM DETAILS

Address	Name	Alert	Alarm	Critical	Refrigerant	Cycle Time (mins)	Pipe Length (ft)
01	NO. 3 AC PLANT FRONT	0050	0300	0850	R114 or R236FA	010	0100
02	NO. 3 AC PLANT BACK	0050	0300	0850	R114 or R236FA	010	0100
03	NO. 4 AC PLANT FRONT	0050	0300	0850	R114 or R236FA	010	0100
04	NO. 4 AC PLANT BACK	0050	0300	0850	R114 or R236FA	010	0100

Recommended Sampling Locations for AC PLANTS NO. 3 & 4

SAMM	Name	Sampling Locations
01	NO. 3 AC PLANT FRONT	1. Test Connections 2. Below Compressor 3. Below Chiller 4. Receiver C/D Valve
02	NO. 3 AC PLANT BACK	1. Below Chiller Drain Valve 2. Hot Gas Bypass Valve (Fwd) 3. Hot Gas Bypass Valve (Aft) 4. CWCV
03	NO. 4 AC PLANT FRONT	1. Test Connections 2. Below Compressor 3. Below Chiller
04	NO. 4 AC PLANT BACK	1. Below Chiller Drain Valve 2. Hot Gas Bypass Valve (Fwd) 3. Hot Gas Bypass Valve (Aft) 4. CWCV

H2-3. AC PLANTS NO. 5 & 6

RELAY DETAILS

Parameter	Relay 1	Relay 2	Relay 3	Relay 4
Operation	Continuous	Continuous	Continuous	Continuous
Mode	System	System	System	System
Logic	Any One	Any One	Any One	Any One
Pulse (m)	03	03	03	03
Inhibit (h)	00	00	00	00
Day Time (h)	06	06	06	06
Day Factor	2.8	2.8	2.8	2.8
Night Time (h)	18	18	18	18
Night Factor	2.8	2.8	2.8	2.8
SAMM 01	X	X	X	X
SAMM 02	X	X	X	X
SAMM 03	X	X	X	X
SAMM 04	X	X	X	X

SAMM DETAILS

Address	Name	Alert	Alarm	Critical	Refrigerant	Cycle Time (mins)	Pipe Length (ft)
01	NO. 5 AC PLANT FRONT	0050	0300	0850	R114 or R236FA	010	0100
02	NO. 5 AC PLANT BACK	0050	0300	0850	R114 or R236FA	010	0100
03	NO. 6 AC PLANT FRONT	0050	0300	0850	R114 or R236FA	010	0100
04	NO. 6 AC PLANT BACK	0050	0300	0850	R114 or R236FA	010	0100

Recommended Sampling Locations for AC PLANTS NO. 5 & 6

SAMM	Name	Sampling Locations
01	NO. 5 AC PLANT FRONT	1. Test Connections 2. Below Compressor 3. Below Chiller 4. Receiver C/D Valve
02	NO. 5 AC PLANT BACK	1. Below Chiller Drain Valve 2. Hot Gas Bypass Valve (Fwd) 3. Hot Gas Bypass Valve (Aft) 4. CWCV
03	NO. 6 AC PLANT FRONT	1. Test Connections 2. Below Compressor 3. Below Chiller
04	NO. 6 AC PLANT BACK	1. Below Chiller Drain Valve 2. Hot Gas Bypass Valve (Fwd) 3. Hot Gas Bypass Valve (Aft) 4. CWCV

H2-4. AC PLANTS NO. 7 & 8

RELAY DETAILS

Parameter	Relay 1	Relay 2	Relay 3	Relay 4
Operation	Continuous	Continuous	Continuous	Continuous
Mode	System	System	System	System
Logic	Any One	Any One	Any One	Any One
Pulse (m)	03	03	03	03
Inhibit (h)	00	00	00	00
Day Time (h)	06	06	06	06
Day Factor	2.8	2.8	2.8	2.8
Night Time (h)	18	18	18	18
Night Factor	2.8	2.8	2.8	2.8
SAMM 01	X	X	X	X
SAMM 02	X	X	X	X
SAMM 03	X	X	X	X
SAMM 04	X	X	X	X

SAMM DETAILS

Address	Name	Alert	Alarm	Critical	Refrigerant	Cycle Time (mins)	Pipe Length (ft)
01	NO. 7 AC PLANT FRONT	0050	0300	0850	R114 or R236FA	010	0100
02	NO. 7 AC PLANT BACK	0050	0300	0850	R114 or R236FA	010	0100
03	NO. 8 AC PLANT FRONT	0050	0300	0850	R114 or R236FA	010	0100
04	NO. 8 AC PLANT BACK	0050	0300	0850	R114 or R236FA	010	0100

Recommended Sampling Locations for AC PLANTS NO. 7 & 8

SAMM	Name	Sampling Locations
01	NO. 7 AC PLANT FRONT	1. Test Connections 2. Below Compressor 3. Below Chiller 4. Below PPO Unit
02	NO. 7 AC PLANT BACK	1. Below Chiller Drain Valve 2. Hot Gas Bypass Valve (Fwd) 3. Hot Gas Bypass Valve (Aft) 4. Receiver C/D Valve
03	NO. 8 AC PLANT FRONT	1. Test Connections 2. Below Compressor 3. Below Chiller 4. Below PPO Unit
04	NO. 8 AC PLANT BACK	1. Below Chiller Drain Valve 2. Hot Gas Bypass Valve (Fwd) 3. Hot Gas Bypass Valve (Aft) 4. CWCV

H2-5. AC PLANT NO. 9

RELAY DETAILS

Parameter	Relay 1	Relay 2	Relay 3	Relay 4
Operation	Continuous	Continuous	Continuous	Continuous
Mode	System	System	System	System
Logic	Any One	Any One	Any One	Any One
Pulse (m)	03	03	03	03
Inhibit (h)	00	00	00	00
Day Time (h)	06	06	06	06
Day Factor	2.8	2.8	2.8	2.8
Night Time (h)	18	18	18	18
Night Factor	2.8	2.8	2.8	2.8
SAMM 01	X	X	X	X
SAMM 02	X	X	X	X
SAMM 03	X	X	X	X
SAMM 04	NOT USED			

SAMM DETAILS

Address	Name	Alert	Alarm	Critical	Refrigerant	Cycle Time (mins)	Pipe Length (ft)
01	NO. 9 AC PLANT FRONT	0050	0300	0850	R114 or R236FA	010	0100
02	NO. 9 AC PLANT BACK	0050	0300	0850	R114 or R236FA	010	0100
03	NO. 9 AC PLANT PPO UNIT	0050	0300	0850	R114 or R236FA	010	0100
04	NOT USED						

Recommended Sampling Locations for AC PLANT NO. 9

SAMM	Name	Sampling Locations
01	NO. 9 AC PLANT FRONT	1. Test Connections 2. Below Compressor 3. Below Chiller 4. Receiver C/D Valve
02	NO. 9 AC PLANT BACK	1. Below Chiller Drain Valve 2. Hot Gas Bypass Valve (Fwd) 3. Hot Gas Bypass Valve (Aft) 4. CWCV
03	NO. 9 AC PLANT PPO UNIT	1. Below PPO Unit
04	NOT USED	

H2-6. AC PLANT NO. 10

RELAY DETAILS

Parameter	Relay 1	Relay 2	Relay 3	Relay 4
Operation	Continuous	Continuous	Continuous	Continuous
Mode	System	System	System	System
Logic	Any One	Any One	Any One	Any One
Pulse (m)	03	03	03	03
Inhibit (h)	00	00	00	00
Day Time (h)	06	06	06	06
Day Factor	2.8	2.8	2.8	2.8
Night Time (h)	18	18	18	18
Night Factor	2.8	2.8	2.8	2.8
SAMM 01	X	X	X	X
SAMM 02	X	X	X	X
SAMM 03	X	X	X	X
SAMM 04	NOT USED			

SAMM DETAILS

Address	Name	Alert	Alarm	Critical	Refrigerant	Cycle Time (mins)	Pipe Length (ft)
01	NO. 10 AC PLANT FRONT	0050	0300	0850	R114 or R236FA	010	0100
02	NO. 10 AC PLANT BACK	0050	0300	0850	R114 or R236FA	010	0100
03	NO. 10 AC PLANT PPO UNIT	0050	0300	0850	R114 or R236FA	010	0100
04	NOT USED						

Recommended Sampling Locations for AC PLANT NO. 10

SAMM	Name	Sampling Locations
01	NO. 10 AC PLANT FRONT	1. Test Connections 2. Below Compressor 3. Below Chiller 4. Receiver C/D Valve
02	NO. 10 AC PLANT BACK	1. Below Chiller Drain Valve 2. Hot Gas Bypass Valve (Fwd) 3. Hot Gas Bypass Valve (Aft) 4. CWCV
03	NO. 10 AC PLANT PPO UNIT	1. Below PPO Unit
04	NOT USED	

H2-7. REFR PLANTS NO. 1, 2, & 3

RELAY DETAILS

Parameter	Relay 1	Relay 2	Relay 3	Relay 4
Operation	Continuous	Continuous	Continuous	Continuous
Mode	System	System	System	System
Logic	Any One	Any One	Any One	Any One
Pulse (m)	03	03	03	03
Inhibit (h)	00	00	00	00
Day Time (h)	06	06	06	06
Day Factor	2.8	2.8	2.8	2.8
Night Time (h)	18	18	18	18
Night Factor	2.8	2.8	2.8	2.8
SAMM 01	X	X	X	X
SAMM 02	X	X	X	X
SAMM 03	X	X	X	X
SAMM 04	X	X	X	X
SAMM 05	X	X	X	X
SAMM 06	X	X	X	X
SAMM 07	NOT USED			
SAMM 08	NOT USED			

SAMM DETAILS

Address	Name	Alert	Alarm	Critical	Refrigerant	Cycle Time (mins)	Pipe Length (ft)
01	NO. 1 REFR PLANT	0050	0300	0850	R134A	010	0100
02	NO. 2 REFR PLANT	0050	0300	0850	R134A	010	0100
03	NO. 3 REFR PLANT	0050	0300	0850	R134A	010	0100
04	NO. 2 RECEIVER	0050	0300	0850	R134A	010	0100
05	NO. 3 RECEIVER	0050	0300	0850	R134A	010	0100
06	TXV AREA	0050	0300	0850	R134A	010	0100
07	NOT USED						
08	NOT USED						

Recommended Sampling Locations for REFR PLANTS NO. 1, 2, & 3

SAMM	Name	Sampling Locations
01	NO. 1 REFR PLANT	1. Below Shaft Seal 2. Below Suction Strainer 3. Below Receiver 4. Dehydrator and Solenoid
02	NO. 2 REFR PLANT	1. Below Shaft Seal 2. Below Suction Strainer 3. Below Receiver 4. Dehydrator and Solenoid
03	NO. 3 REFR PLANT	1. Below Shaft Seal 2. Below Suction Strainer 3. Below Receiver 4. Dehydrator and Solenoid
04	NO. 2 RECEIVER	1. Charging Connection 2. Below Receiver
05	NO. 3 RECEIVER	1. Charging Connection 2. Below Receiver
06	TXV AREA	1. TXV Filter Drier 2. TXV Filter Area
07	NOT USED	
08	NOT USED	

H2-8. REFR PLANTS NO. 4, 5, & 6

RELAY DETAILS

Parameter	Relay 1	Relay 2	Relay 3	Relay 4
Operation	Continuous	Continuous	Continuous	Continuous
Mode	System	System	System	System
Logic	Any One	Any One	Any One	Any One
Pulse (m)	03	03	03	03
Inhibit (h)	00	00	00	00
Day Time (h)	06	06	06	06
Day Factor	2.8	2.8	2.8	2.8
Night Time (h)	18	18	18	18
Night Factor	2.8	2.8	2.8	2.8
SAMM 01	X	X	X	X
SAMM 02	X	X	X	X
SAMM 03	X	X	X	X
SAMM 04	X	X	X	X
SAMM 05	X	X	X	X
SAMM 06	X	X	X	X
SAMM 07	NOT USED			
SAMM 08	NOT USED			

SAMM DETAILS

Address	Name	Alert	Alarm	Critical	Refrigerant	Cycle Time (mins)	Pipe Length (ft)
01	NO. 4 REFR PLANT	0050	0300	0850	R134A	010	0100
02	NO. 5 REFR PLANT	0050	0300	0850	R134A	010	0100
03	NO. 6 REFR PLANT	0050	0300	0850	R134A	010	0100
04	NO. 5 RECEIVER	0050	0300	0850	R134A	010	0100
05	NO. 6 RECEIVER	0050	0300	0850	R134A	010	0100
06	TXV AREA	0050	0300	0850	R134A	010	0100
07	NOT USED						
08	NOT USED						

Recommended Sampling Locations for REFR PLANTS NO. 4, 5, & 6

SAMM	Name	Sampling Locations
01	NO. 4 REFR PLANT	1. Below Shaft Seal 2. Below Suction Strainer 3. Below Receiver 4. Dehydrator and Solenoid
02	NO. 5 REFR PLANT	1. Below Shaft Seal 2. Below Suction Strainer 3. Below Receiver 4. Dehydrator and Solenoid
03	NO. 6 REFR PLANT	1. Below Shaft Seal 2. Below Suction Strainer 3. Below Receiver 4. Dehydrator and Solenoid
04	NO. 5 RECEIVER	1. Charging Connection 2. Below Receiver
05	NO. 6 RECEIVER	1. Charging Connection 2. Below Receiver
06	TXV AREA	1. TXV Filter Drier 2. TXV Filter Area
07	NOT USED	
08	NOT USED	

H2-9. REFRIGERATED SPACES FWD

RELAY DETAILS

Parameter	Relay 1	Relay 2	Relay 3	Relay 4
Operation	Continuous	Continuous	Continuous	Continuous
Mode	System	System	System	System
Logic	Any One	Any One	Any One	Any One
Pulse (m)	03	03	03	03
Inhibit (h)	00	00	00	00
Day Time (h)	06	06	06	06
Day Factor	2.8	2.8	2.8	2.8
Night Time (h)	18	18	18	18
Night Factor	2.8	2.8	2.8	2.8
SAMM 01	X	X	X	X
SAMM 02	X	X	X	X
SAMM 03	X	X	X	X
SAMM 04	X	X	X	X

SAMM DETAILS

Address	Name	Alert	Alarm	Critical	Refrigerant	Cycle Time (mins)	Pipe Length (ft)
01	CHILLED STRM PORT	0050	0300	0850	R134A	010	0100
02	CHILLED STRM STBD	0050	0300	0850	R134A	010	0100
03	PASSAGEWAY 4-48-0-L	0050	0300	0850	R134A	010	0100
04	FREEZE STRM 5-48-0-A	0050	0300	0850	R134A	010	0100

Recommended Sampling Locations for REFRIGERATED SPACES FWD

SAMM	Name	Sampling Locations
01	CHILLED STRM PORT	1. 9” Above Deck Near Door 2. Ovhd Center
02	CHILLED STRM STBD	1. 9” Above Deck Near Door 2. Ovhd Center
03	PASSAGEWAY 4-48-0-L	1. TXV/Filter Drier 2. TXV/Filter Drier 3. TXV/Filter Drier 4. TXV/Filter Drier
04	FREEZE STRM 5-48-0-A	1. 9” Above Deck Near Door 2. Ovhd Port Center 3. Ovhd Stbd Center

H2-10. REFRIGERATED SPACES AFT (4-192-2-L)

RELAY DETAILS

Parameter	Relay 1	Relay 2	Relay 3	Relay 4
Operation	Continuous	Continuous	Continuous	Continuous
Mode	System	System	System	System
Logic	Any One	Any One	Any One	Any One
Pulse (m)	03	03	03	03
Inhibit (h)	00	00	00	00
Day Time (h)	06	06	06	06
Day Factor	2.8	2.8	2.8	2.8
Night Time (h)	18	18	18	18
Night Factor	2.8	2.8	2.8	2.8
SAMM 01	X	X	X	X
SAMM 02	X	X	X	X
SAMM 03	X	X	X	X
SAMM 04	NOT USED			

SAMM DETAILS

Address	Name	Alert	Alarm	Critical	Refrigerant	Cycle Time (mins)	Pipe Length (ft)
01	FREEZE STRM (4-191-2-A)	0050	0300	0850	R134A	010	0100
02	FREEZE STRM (4-185-0-A)	0050	0300	0850	R134A	010	0100
03	PASSAGEWAY (4-192-2-L)	0050	0300	0850	R134A	010	0100
04	NOT USED						

Recommended Sampling Locations for REFRIGERATED SPACES AFT (4-192-2-L)

SAMM	Name	Sampling Locations
01	FREEZE STRM (4-191-2-A)	1. 9” Above Deck Near Door 2. Ovhd Center 3. Ovhd Port 4. Ovhd Stbd
02	FREEZE STRM (4-185-0-A)	1. Ovhd Fwd 2. Ovhd Aft
03	PASSAGEWAY (4-192-2-L)	1. TXV/Filter Drier 2. TXV/Filter Drier
04	NOT USED	

H2-11. REFRIGERATED SPACES AFT (4-200-2-L)

RELAY DETAILS

Parameter	Relay 1	Relay 2	Relay 3	Relay 4
Operation	Continuous	Continuous	Continuous	Continuous
Mode	System	System	System	System
Logic	Any One	Any One	Any One	Any One
Pulse (m)	03	03	03	03
Inhibit (h)	00	00	00	00
Day Time (h)	06	06	06	06
Day Factor	2.8	2.8	2.8	2.8
Night Time (h)	18	18	18	18
Night Factor	2.8	2.8	2.8	2.8
SAMM 01	X	X	X	X
SAMM 02	X	X	X	X
SAMM 03	X	X	X	X
SAMM 04	X	X	X	X

SAMM DETAILS

Address	Name	Alert	Alarm	Critical	Refrigerant	Cycle Time (mins)	Pipe Length (ft)
01	PHOTO STRM (4-201-2-L)	0050	0300	0850	R134A	010	0100
02	CHILLED STRM PORT (4-195-2-A)	0050	0300	0850	R134A	010	0100
03	CHILLED STRM STBD (4-200-0-A)	0050	0300	0850	R134A	010	0100
04	PASSAGEWAY (4-200-2-L)	0050	0300	0850	R134A	010	0100

Recommended Sampling Locations for REFRIGERATED SPACES AFT (4-200-2-L)

SAMM	Name	Sampling Locations
01	PHOTO STRM (4-201-2-L)	1. 9” Above Deck Near Door 2. Ovhd Center
02	CHILLED STRM PORT (4-195-2-A)	1. 9” Above Deck Near Door 2. Ovhd Center
03	CHILLED STRM STBD (4-200-0-A)	1. 9” Above Deck Near Door 2. Ovhd Center 3. 9” Above Deck Fwd Stbd Corner
04	PASSAGEWAY (4-200-2-L)	1. TXV/Filter Drier 2. TXV/Filter Drier 3. TXV/Filter Drier 4. TXV/Filter Drier

SECTION H3

(CVN 65)

H3-1. TARPS COMPRESSOR

RELAY DETAILS

Parameter	Relay 1	Relay 2	Relay 3	Relay 4
Operation	Continuous	Continuous	Continuous	Continuous
Mode	System	System	System	System
Logic	Any One	Any One	Any One	Any One
Pulse (m)	03	03	03	03
Inhibit (h)	00	00	00	00
Day Time (h)	06	06	06	06
Day Factor	2.8	2.8	2.8	2.8
Night Time (h)	18	18	18	18
Night Factor	2.8	2.8	2.8	2.8
SAMM 01	X	X	X	X
SAMM 02	X	X	X	X
SAMM 03	NOT USED			
SAMM 04	NOT USED			

SAMM DETAILS

Address	Name	Alert	Alarm	Critical	Refrigerant	Cycle Time (mins)	Pipe Length (ft)
01	COMPRESSOR	0050	0300	0850	R134A	010	0100
02	COND/RCVR	0050	0300	0850	R134A	010	0100
03	NOT USED						
04	NOT USED						

Recommended Sampling Locations for TARPS COMPRESSOR

SAMM	Name	Sampling Locations
01	COMPRESSOR	1. Below Shaft Seal 2. Below Suction Strainer
02	COND/RCVR	1. C/D Valve 2. Condenser Purge Valve 3. Gageboard 4. CWCV
03	NOT USED	
04	NOT USED	

H3-2. AC PLANT NO. 1

RELAY DETAILS

Parameter	Relay 1	Relay 2	Relay 3	Relay 4
Operation	Continuous	Continuous	Continuous	Continuous
Mode	System	System	System	System
Logic	Any One	Any One	Any One	Any One
Pulse (m)	03	03	03	03
Inhibit (h)	00	00	00	00
Day Time (h)	06	06	06	06
Day Factor	2.8	2.8	2.8	2.8
Night Time (h)	18	18	18	18
Night Factor	2.8	2.8	2.8	2.8
SAMM 01	X	X	X	X
SAMM 02	X	X	X	X
SAMM 03	NOT USED			
SAMM 04	NOT USED			

SAMM DETAILS

Address	Name	Alert	Alarm	Critical	Refrigerant	Cycle Time (mins)	Pipe Length (ft)
01	NO. 1 AC PLANT FRONT	0050	0300	0850	R114 or R236FA	010	0100
02	NO. 1 AC PLANT BACK	0050	0300	0850	R114 or R236FA	010	0100
03	NOT USED						
04	NOT USED						

Recommended Sampling Locations for AC PLANT NO. 1

SAMM	Name	Sampling Locations
01	NO. 1 AC PLANT FRONT	1. Gageboard/Test Connections 2. Below Oil Filters 3. Below Compressor
02	NO. 1 AC PLANT BACK	1. Hot Gas Bypass Valve No. 1 2. Hot Gas Bypass Valve No. 2 3. Below PPO Unit 4. Below Chiller
03	NOT USED	
04	NOT USED	

H3-3. AC PLANT NO. 2

RELAY DETAILS

Parameter	Relay 1	Relay 2	Relay 3	Relay 4
Operation	Continuous	Continuous	Continuous	Continuous
Mode	System	System	System	System
Logic	Any One	Any One	Any One	Any One
Pulse (m)	03	03	03	03
Inhibit (h)	00	00	00	00
Day Time (h)	06	06	06	06
Day Factor	2.8	2.8	2.8	2.8
Night Time (h)	18	18	18	18
Night Factor	2.8	2.8	2.8	2.8
SAMM 01	X	X	X	X
SAMM 02	X	X	X	X
SAMM 03	NOT USED			
SAMM 04	NOT USED			

SAMM DETAILS

Address	Name	Alert	Alarm	Critical	Refrigerant	Cycle Time (mins)	Pipe Length (ft)
01	NO. 2 AC PLANT FRONT	0050	0300	0850	R114 or R236FA	010	0100
02	NO. 2 AC PLANT BACK	0050	0300	0850	R114 or R236FA	010	0100
03	NOT USED						
04	NOT USED						

Recommended Sampling Locations for AC PLANT NO. 2

SAMM	Name	Sampling Locations
01	NO. 2 AC PLANT FRONT	1. Gageboard/Test Connections 2. Below Oil Filters 3. Below Compressor
02	NO. 2 AC PLANT BACK	1. Hot Gas Bypass Valve No. 1 2. Hot Gas Bypass Valve No. 2 3. Below PPO Unit 4. Below Chiller
03	NOT USED	
04	NOT USED	

H3-4. AC PLANT NO. 3

RELAY DETAILS

Parameter	Relay 1	Relay 2	Relay 3	Relay 4
Operation	Continuous	Continuous	Continuous	Continuous
Mode	System	System	System	System
Logic	Any One	Any One	Any One	Any One
Pulse (m)	03	03	03	03
Inhibit (h)	00	00	00	00
Day Time (h)	06	06	06	06
Day Factor	2.8	2.8	2.8	2.8
Night Time (h)	18	18	18	18
Night Factor	2.8	2.8	2.8	2.8
SAMM 01	X	X	X	X
SAMM 02	X	X	X	X
SAMM 03	NOT USED			
SAMM 04	NOT USED			

SAMM DETAILS

Address	Name	Alert	Alarm	Critical	Refrigerant	Cycle Time (mins)	Pipe Length (ft)
01	NO. 3 AC PLANT FRONT	0050	0300	0850	R114 or R236FA	010	0100
02	NO. 3 AC PLANT BACK	0050	0300	0850	R114 or R236FA	010	0100
03	NOT USED						
04	NOT USED						

Recommended Sampling Locations for AC PLANT NO. 3

SAMM	Name	Sampling Locations
01	NO. 3 AC PLANT FRONT	1. Gageboard/Test Connections 2. Below Oil Filters 3. Below Compressor
02	NO. 3 AC PLANT BACK	1. Hot Gas Bypass Valve No. 1 2. Hot Gas Bypass Valve No. 2 3. Below PPO Unit 4. Below Chiller
03	NOT USED	
04	NOT USED	

H3-5. AC PLANT NO. 4

RELAY DETAILS

Parameter	Relay 1	Relay 2	Relay 3	Relay 4
Operation	Continuous	Continuous	Continuous	Continuous
Mode	System	System	System	System
Logic	Any One	Any One	Any One	Any One
Pulse (m)	03	03	03	03
Inhibit (h)	00	00	00	00
Day Time (h)	06	06	06	06
Day Factor	2.8	2.8	2.8	2.8
Night Time (h)	18	18	18	18
Night Factor	2.8	2.8	2.8	2.8
SAMM 01	X	X	X	X
SAMM 02	X	X	X	X
SAMM 03	NOT USED			
SAMM 04	NOT USED			

SAMM DETAILS

Address	Name	Alert	Alarm	Critical	Refrigerant	Cycle Time (mins)	Pipe Length (ft)
01	NO. 4 AC PLANT COMPRESSOR	0050	0300	0850	R114 or R236FA	010	0100
02	NO. 4 AC PLANT COND/ CHILLER	0050	0300	0850	R114 or R236FA	010	0100
03	NOT USED						
04	NOT USED						

Recommended Sampling Locations for AC PLANT NO. 4

SAMM	Name	Sampling Locations
01	NO. 4 AC PLANT COMPRESSOR	1. Below PPO Unit 2. Below Oil Filters 3. Below Compressor 4. Below Gagegoard
02	NO. 4 AC PLANT COND/ CHILLER	1. C/D Valve 2. Below Chiller 3. Rupture Disk Test Connection
03	NOT USED	
04	NOT USED	

H3-6. AC PLANTS NO. 7 & 16

RELAY DETAILS

Parameter	Relay 1	Relay 2	Relay 3	Relay 4
Operation	Continuous	Continuous	Continuous	Continuous
Mode	System	System	System	System
Logic	Any One	Any One	Any One	Any One
Pulse (m)	03	03	03	03
Inhibit (h)	00	00	00	00
Day Time (h)	06	06	06	06
Day Factor	2.8	2.8	2.8	2.8
Night Time (h)	18	18	18	18
Night Factor	2.8	2.8	2.8	2.8
SAMM 01	X	X	X	X
SAMM 02	X	X	X	X
SAMM 03	X	X	X	X
SAMM 04	X	X	X	X

SAMM DETAILS

Address	Name	Alert	Alarm	Critical	Refrigerant	Cycle Time (mins)	Pipe Length (ft)
01	NO. 16 AC PLANT FRONT	0050	0300	0850	R114 or R236FA	010	0100
02	NO. 16 AC PLANT BACK	0050	0300	0850	R114 or R236FA	010	0100
03	NO. 7 AC PLANT FRONT	0050	0300	0850	R114 or R236FA	010	0100
04	NO. 7 AC PLANT BACK	0050	0300	0850	R114 or R236FA	010	0100

Recommended Sampling Locations for AC PLANTS NO. 7 & 16

SAMM	Name	Sampling Locations
01	NO. 16 AC PLANT FRONT	1. Gageboard/Test Connections 2. Below Compressor 3. Below Oil Filters 4. PPO Unit and C/D Valve
02	NO. 16 AC PLANT BACK	1. Hot Gas Bypass Valve No. 1 2. Hot Gas Bypass Valve No. 2 3. Below Chiller 4. CWCV
03	NO. 7 AC PLANT FRONT	1. Gageboard/Test Connections 2. Below Compressor 3. Below Oil Filters 4. PPO Unit and C/D Valve
04	NO. 7 AC PLANT BACK	1. Hot Gas Bypass Valve No. 1 2. Hot Gas Bypass Valve No. 2 3. Below Chiller

H3-7. REFR PLANTS NO. 1, 2, & 3

RELAY DETAILS

Parameter	Relay 1	Relay 2	Relay 3	Relay 4
Operation	Continuous	Continuous	Continuous	Continuous
Mode	System	System	System	System
Logic	Any One	Any One	Any One	Any One
Pulse (m)	03	03	03	03
Inhibit (h)	00	00	00	00
Day Time (h)	06	06	06	06
Day Factor	2.8	2.8	2.8	2.8
Night Time (h)	18	18	18	18
Night Factor	2.8	2.8	2.8	2.8
SAMM 01	X	X	X	X
SAMM 02	X	X	X	X
SAMM 03	X	X	X	X
SAMM 04	X	X	X	X

SAMM DETAILS

Address	Name	Alert	Alarm	Critical	Refrigerant	Cycle Time (mins)	Pipe Length (ft)
01	NO. 1 REFR PLANT	0050	0300	0850	R134A	010	0100
02	NO. 2 REFR PLANT	0050	0300	0850	R134A	010	0100
03	NO. 3 REFR PLANT	0050	0300	0850	R134A	010	0100
04	TXV AREA	0050	0300	0850	R134A	010	0100

Recommended Sampling Locations for REFR PLANTS NO. 1, 2, & 3

SAMM	Name	Sampling Locations
01	NO. 1 REFR PLANT	1. Below Shaft Seal 2. Below Suction Strainer 3. C/D Valve 4. Condenser Purge Valve
02	NO. 2 REFR PLANT	1. Below Shaft Seal 2. Below Suction Strainer 3. C/D Valve 4. Condenser Purge Valve
03	NO. 3 REFR PLANT	1. Below Shaft Seal 2. Below Suction Strainer 3. C/D Valve 4. Condenser Purge Valve
04	TXV AREA	1. Test Connections 2. Upper TXV 3. Mid TXV 4. Lower TXV

H3-8. REFR PLANTS NO. 4, 5, & 6, AND AC PLANTS NO. 5 & 6

RELAY DETAILS

Parameter	**Relay 1**	**Relay 2**	**Relay 3**	**Relay 4**
Operation	Continuous	Continuous	Continuous	Continuous
Mode	System	System	System	System
Logic	Any One	Any One	Any One	Any One
Pulse (m)	03	03	03	03
Inhibit (h)	00	00	00	00
Day Time (h)	06	06	06	06
Day Factor	2.8	2.8	2.8	2.8
Night Time (h)	18	18	18	18
Night Factor	2.8	2.8	2.8	2.8
SAMM 01	X	X	X	X
SAMM 02	X	X	X	X
SAMM 03	X	X	X	X
SAMM 04	X	X	X	X
SAMM 05	X	X	X	X
SAMM 06	X	X	X	X
SAMM 07	X	X	X	X
SAMM 08	NOT USED			

SAMM DETAILS

Address	**Name**	**Alert**	**Alarm**	**Critical**	**Refrigerant**	**Cycle Time (mins)**	**Pipe Length (ft)**
01	NO. 6 REFR PLANT	0050	0300	0850	R134A	010	0100
02	NO. 5 REFR PLANT	0050	0300	0850	R134A	010	0100
03	NO. 4 REFR PLANT	0050	0300	0850	R134A	010	0100
04	TXV AREA	0050	0300	0850	R134A	010	0100
05	NO. 5 AC PLANT FRONT	0050	0300	0850	R114 or R236FA	010	0100
06	BETWEEN NO. 5 AND NO. 6 AC PLANTS	0050	0300	0850	R114 or R236FA	010	0100
07	NO. 6 AC PLANT FRONT	0050	0300	0850	R114 or R236FA	010	0100
08	NOT USED						

Recommended Sampling Locations for REFR PLANTS NO. 4, 5, & 6, AND AC PLANTS NO. 5 & 6

SAMM	Name	Sampling Locations
01	NO. 6 REFR PLANT	1. Below Shaft Seal 2. Below Suction Strainer 3. C/D Valve 4. Condenser Purge Valve
02	NO. 5 REFR PLANT	1. Below Shaft Seal 2. Below Suction Strainer 3. C/D Valve 4. Condenser Purge Valve
03	NO. 4 REFR PLANT	1. Below Shaft Seal 2. Below Suction Strainer 3. C/D Valve 4. Condenser Purge Valve
04	TXV AREA	1. Port TXVs Fwd Upper 2. Port TXVs Aft Lower 3. Stbd TXVs Fwd Upper 4. Stbd TXVs Aft Lower
05	NO. 5 AC PLANT FRONT	1. Test Connections 2. Below Compressor 3. Below Oil Filters
06	BETWEEN NO. 5 AND NO. 6 AC PLANTS	1. Hot Gas Bypass Fwd No. 5 & 6 2. Hot Gas Bypass Aft No. 5 & 6 3. PPO Unit and C/D Valve 4. Between No. 5 & 6 Chillers
07	NO. 6 AC PLANT FRONT	1. Test Connections 2. Below Compressor 3. Below Oil Filters
08	NOT USED	

H3-9. FWD BOXES 1-4

RELAY DETAILS

Parameter	Relay 1	Relay 2	Relay 3	Relay 4
Operation	Continuous	Continuous	Continuous	Continuous
Mode	System	System	System	System
Logic	Any One	Any One	Any One	Any One
Pulse (m)	03	03	03	03
Inhibit (h)	00	00	00	00
Day Time (h)	06	06	06	06
Day Factor	2.8	2.8	2.8	2.8
Night Time (h)	18	18	18	18
Night Factor	2.8	2.8	2.8	2.8
SAMM 01	X	X	X	X
SAMM 02	X	X	X	X
SAMM 03	X	X	X	X
SAMM 04	X	X	X	X

SAMM DETAILS

Address	Name	Alert	Alarm	Critical	Refrigerant	Cycle Time (mins)	Pipe Length (ft)
01	NO. 1 CHILL BOX	0050	0300	0850	R134A	010	0100
02	NO. 2 CHILL BOX	0050	0300	0850	R134A	010	0100
03	NO. 3 CHILL BOX	0050	0300	0850	R134A	010	0100
04	VESTIBULE (5-45-0-A)	0050	0300	0850	R134A	010	0100

Recommended Sampling Locations for FWD BOXES 1-4

SAMM	Name	Sampling Locations
01	NO. 1 CHILL BOX	1. 9” Above Deck Near Entrance 2. Ovhd Aft Stbd Corner
02	NO. 2 CHILL BOX	1. 9” Above Deck Near Entrance of Second Compartment 2. Ovhd Center
03	NO. 3 CHILL BOX	1. 9” Above Deck Near Entrance
04	VESTIBULE (5-45-0-A)	1. 9” Above Deck Near Entrance

H3-10. FWD BOXES 5-7

RELAY DETAILS

Parameter	Relay 1	Relay 2	Relay 3	Relay 4
Operation	Continuous	Continuous	Continuous	Continuous
Mode	System	System	System	System
Logic	Any One	Any One	Any One	Any One
Pulse (m)	03	03	03	03
Inhibit (h)	00	00	00	00
Day Time (h)	06	06	06	06
Day Factor	2.8	2.8	2.8	2.8
Night Time (h)	18	18	18	18
Night Factor	2.8	2.8	2.8	2.8
SAMM 01	X	X	X	X
SAMM 02	X	X	X	X
SAMM 03	X	X	X	X
SAMM 04	NOT USED			

SAMM DETAILS

Address	Name	Alert	Alarm	Critical	Refrigerant	Cycle Time (mins)	Pipe Length (ft)
01	VESTIBULE (5-38-0-A)	0050	0300	0850	R134A	010	0100
02	FREEZE STRM (5-32-0-A)	0050	0300	0850	R134A	010	0100
03	WARD RM FREEZE (5-37-1-A)	0050	0300	0850	R134A	010	0100
04	NOT USED						

Recommended Sampling Locations for FWD BOXES 5-7

SAMM	Name	Sampling Locations
01	VESTIBULE (5-38-0-A)	1. 9” Above Deck Near Entrance
02	FREEZE STRM (5-32-0-A)	1. 9” Above Deck Near Entrance 2. Ovhd Center
03	WARD RM FREEZE (5-37-1-A)	1. 9” Above Deck Near Entrance 2. Ovhd Center
04	NOT USED	

H3-11. AFT BOXES 8-14

RELAY DETAILS

Parameter	Relay 1	Relay 2	Relay 3	Relay 4
Operation	Continuous	Continuous	Continuous	Continuous
Mode	System	System	System	System
Logic	Any One	Any One	Any One	Any One
Pulse (m)	03	03	03	03
Inhibit (h)	00	00	00	00
Day Time (h)	06	06	06	06
Day Factor	2.8	2.8	2.8	2.8
Night Time (h)	18	18	18	18
Night Factor	2.8	2.8	2.8	2.8
SAMM 01	X	X	X	X
SAMM 02	X	X	X	X
SAMM 03	X	X	X	X
SAMM 04	X	X	X	X
SAMM 05	X	X	X	X
SAMM 06	X	X	X	X
SAMM 07	X	X	X	X
SAMM 08	NOT USED			

SAMM DETAILS

Address	Name	Alert	Alarm	Critical	Refrigerant	Cycle Time (mins)	Pipe Length (ft)
01	VESTIBULE (5-200-0-A)	0050	0300	0850	R134A	010	0100
02	CHILL BOX (5-201-2-A)	0050	0300	0850	R134A	010	0100
03	CHILL BOX (5-195-0-A)	0050	0300	0850	R134A	010	0100
04	BODY STORAGE (5-202-2-A)	0050	0300	0850	R134A	010	0100
05	WARD RM FREEZE (5-202-1-A)	0050	0300	0850	R134A	010	0100
06	FREEZE STRM (5-195-1-A)	0050	0300	0850	R134A	010	0100
07	SENSITIZED FILM STRM	0050	0300	0850	R134A	010	0100
08	NOT USED						

Recommended Sampling Locations for AFT BOXES 8-14

SAMM	Name	Sampling Locations
01	VESTIBULE (5-200-0-A)	1. 9” Above Deck Near Entrance 2. Ovhd Center
02	CHILL BOX (5-201-2-A)	1. 9” Above Deck Near Door
03	CHILL BOX (5-195-0-A)	1. 9” Above Deck Near Door
04	BODY STORAGE (5-202-2-A)	1. 9” Above Deck Near Door
05	WARD RM FREEZE (5-202-1-A)	1. 9” Above Deck Near Door 2. Ovhd Center
06	FREEZE STRM (5-195-1-A)	1. 9” Above Deck Near Door 2. Ovhd Center 3. Ovhd Port or Stbd
07	SENSITIZED FILM STRM	1. 9” Above Deck Near Door
08	NOT USED	

SECTION H4

(CVN 68 CLASS)

H4-1. AC PLANTS NO. 1 & 2, AND REFR PLANTS NO. 1 & 2

RELAY DETAILS

Parameter	Relay 1	Relay 2	Relay 3	Relay 4
Operation	Continuous	Continuous	Continuous	Continuous
Mode	System	System	System	System
Logic	Any One	Any One	Any One	Any One
Pulse (m)	03	03	03	03
Inhibit (h)	00	00	00	00
Day Time (h)	06	06	06	06
Day Factor	2.8	2.8	2.8	2.8
Night Time (h)	18	18	18	18
Night Factor	2.8	2.8	2.8	2.8
SAMM 01	X	X	X	X
SAMM 02	X	X	X	X
SAMM 03	X	X	X	X
SAMM 04	X	X	X	X
SAMM 05	X	X	X	X
SAMM 06	X	X	X	X
SAMM 07	X	X	X	X
SAMM 08	X	X	X	X

SAMM DETAILS

Address	Name	Alert	Alarm	Critical	Refrigerant	Cycle Time (mins)	Pipe Length (ft)
01	NO. 1 AC PLANT FRONT	0050	0300	0850	R114 or R236FA	010	0100
02	NO. 1 AC PLANT BACK	0050	0300	0850	R114 or R236FA	010	0100
03	NO. 2 AC PLANT FRONT	0050	0300	0850	R114 or R236FA	010	0100
04	NO. 2 AC PLANT BACK	0050	0300	0850	R114 or R236FA	010	0100
05	NO. 1 REFR PLANT COM-PRESSOR	0050	0300	0850	R134A	010	0100
06	NO. 1 REFR PLANT COND RCVR	0050	0300	0850	R134A	010	0100
07	NO. 2 REFR PLANT COM-PRESSOR	0050	0300	0850	R134A	010	0100
08	NO. 2 REFR PLANT COND RCVR	0050	0300	0850	R134A	010	0100

Recommended Sampling Locations for AC PLANTS NO. 1 & 2, AND REFR PLANTS NO. 1 & 2

SAMM	Name	Sampling Locations
01	NO. 1 AC PLANT FRONT	1. Test Connections 2. Below Compressor 3. PPO Unit 4. Drain Valve
02	NO. 1 AC PLANT BACK	1. Below Chiller Drain Valve 2. Hot Gas Bypass Valve No. 1 3. Hot Gas Bypass Valve No. 2
03	NO. 2 AC PLANT FRONT	1. Test Connections 2. Below Compressor 3. PPO Unit 4. Drain Valve
04	NO. 2 AC PLANT BACK	1. Below Chiller Drain Valve 2. Hot Gas Bypass Valve No. 1 3. Hot Gas Bypass Valve No. 2
05	NO. 1 REFR PLANT COM-PRESSOR	1. Shaft Seal 2. Gageboard
06	NO. 1 REFR PLANT COND RCVR	1. Dehydrator/Solenoid Area 2. Purge Valves
07	NO. 2 REFR PLANT COM-PRESSOR	1. Shaft Seal 2. Gageboard
08	NO. 2 REFR PLANT COND RCVR	1. Drain Valve Area 2. Dehydrator Area

H4-2. AC PLANTS NO. 3 & 4, AND REFR PLANTS NO. 3, 4, & 5

RELAY DETAILS

Parameter	Relay 1	Relay 2	Relay 3	Relay 4
Operation	Continuous	Continuous	Continuous	Continuous
Mode	System	System	System	System
Logic	Any One	Any One	Any One	Any One
Pulse (m)	03	03	03	03
Inhibit (h)	00	00	00	00
Day Time (h)	06	06	06	06
Day Factor	2.8	2.8	2.8	2.8
Night Time (h)	18	18	18	18
Night Factor	2.8	2.8	2.8	2.8
SAMM 01	X	X	X	X
SAMM 02	X	X	X	X
SAMM 03	X	X	X	X
SAMM 04	X	X	X	X
SAMM 05	X	X	X	X
SAMM 06	X	X	X	X
SAMM 07	X	X	X	X
SAMM 08	NOT USED			

SAMM DETAILS

Address	Name	Alert	Alarm	Critical	Refrigerant	Cycle Time (mins)	Pipe Length (ft)
01	NO. 3 AC PLANT FRONT	0050	0300	0850	R114 or R236FA	010	0100
02	NO. 3 AC PLANT BACK	0050	0300	0850	R114 or R236FA	010	0100
03	NO. 4 AC PLANT FRONT	0050	0300	0850	R114 or R236FA	010	0100
04	NO. 4 AC PLANT BACK	0050	0300	0850	R114 or R236FA	010	0100
05	NO. 3 REFR PLANT	0050	0300	0850	R134A	010	0100
06	NO. 4 REFR PLANT	0050	0300	0850	R134A	010	0100
07	NO. 5 REFR PLANT	0050	0300	0850	R134A	010	0100
08	NOT USED						

Recommended Sampling Locations for AC PLANTS NO. 3 & 4, AND REFR PLANTS NO. 3, 4, & 5

SAMM	Name	Sampling Locations
01	NO. 3 AC PLANT FRONT	1. Test Connections 2. Below Compressor 3. Below Chiller
02	NO. 3 AC PLANT BACK	1. Below Chiller Drain Valve 2. Hot Gas Bypass Valve 3. Below Oil Filters 4. Below PPO Unit
03	NO. 4 AC PLANT FRONT	1. Test Connections 2. Below Compressor 3. Below Chiller
04	NO. 4 AC PLANT BACK	1. Below Chiller Drain Valve 2. Hot Gas Bypass Valve 3. Below Oil Filters 4. Below PPO Unit
05	NO. 3 REFR PLANT	1. Dehydrator Area 2. Purge Valve 3. Test Connection Gageboard 4. Compressor Shaft Seal
06	NO. 4 REFR PLANT	1. Dehydrator Area 2. Purge Valve 3. Test Connection Gageboard 4. Compressor Shaft Seal
07	NO. 5 REFR PLANT	1. Dehydrator Area 2. Purge Valve 3. Test Connection Gageboard 4. Compressor Shaft Seal
08	NOT USED	

H4-3. AC PLANTS NO. 8 & 10

RELAY DETAILS

Parameter	Relay 1	Relay 2	Relay 3	Relay 4
Operation	Continuous	Continuous	Continuous	Continuous
Mode	System	System	System	System
Logic	Any One	Any One	Any One	Any One
Pulse (m)	03	03	03	03
Inhibit (h)	00	00	00	00
Day Time (h)	06	06	06	06
Day Factor	2.8	2.8	2.8	2.8
Night Time (h)	18	18	18	18
Night Factor	2.8	2.8	2.8	2.8
SAMM 01	X	X	X	X
SAMM 02	X	X	X	X
SAMM 03	X	X	X	X
SAMM 04	X	X	X	X
SAMM 05	X	X	X	X
SAMM 06	NOT USED			
SAMM 07	NOT USED			
SAMM 08	NOT USED			

SAMM DETAILS

Address	Name	Alert	Alarm	Critical	Refrigerant	Cycle Time (mins)	Pipe Length (ft)
01	NO. 8 AC PLANT FRONT	0050	0300	0850	R114 or R236FA	010	0100
02	NO. 8 AC PLANT BACK	0050	0300	0850	R114 or R236FA	010	0100
03	REMOTE RECEIVER	0050	0300	0850	R114 or R236FA	010	0100
04	NO. 10 AC PLANT FRONT	0050	0300	0850	R114 or R236FA	010	0100
05	NO. 10 AC PLANT BACK	0050	0300	0850	R114 or R236FA	010	0100
06	NOT USED						
07	NOT USED						
08	NOT USED						

Recommended Sampling Locations for AC PLANTS NO. 8 & 10

SAMM	Name	Sampling Locations
01	NO. 8 AC PLANT FRONT	1. Test Connections 2. Below Compressor 3. PPO Unit 4. Drain Valve
02	NO. 8 AC PLANT BACK	1. Below Chiller 2. Hot Gas Bypass Valve No. 1 3. Hot Gas Bypass Valve No. 2 4. Compressor Discharge Flange
03	REMOTE RECEIVER	1. Below Valves on Top of Receiver 2. Below Hose Connection
04	NO. 10 AC PLANT FRONT	1. Test Connections 2. Below Compressor 3. PPO Unit 4. Drain Valve
05	NO. 10 AC PLANT BACK	1. Below Chiller 2. Hot Gas Bypass Valve No. 1 3. Hot Gas Bypass Valve No. 2 4. Compressor Discharge Flange
06	NOT USED	
07	NOT USED	
08	NOT USED	

H4-4. AC PLANT NO. 9

RELAY DETAILS

Parameter	Relay 1	Relay 2	Relay 3	Relay 4
Operation	Continuous	Continuous	Continuous	Continuous
Mode	System	System	System	System
Logic	Any One	Any One	Any One	Any One
Pulse (m)	03	03	03	03
Inhibit (h)	00	00	00	00
Day Time (h)	06	06	06	06
Day Factor	2.8	2.8	2.8	2.8
Night Time (h)	18	18	18	18
Night Factor	2.8	2.8	2.8	2.8
SAMM 01	X	X	X	X
SAMM 02	X	X	X	X
SAMM 03	X	X	X	X
SAMM 04	NOT USED			

SAMM DETAILS

Address	Name	Alert	Alarm	Critical	Refrigerant	Cycle Time (mins)	Pipe Length (ft)
01	NO. 9 AC PLANT FRONT	0050	0300	0850	R114 or R236FA	010	0100
02	NO. 9 AC PLANT BACK	0050	0300	0850	R114 or R236FA	010	0100
03	REMOTE RECEIVER	0050	0300	0850	R114 or R236FA	010	0100
04	NOT USED						

Recommended Sampling Locations for AC PLANT NO. 9

SAMM	Name	Sampling Locations
01	NO. 9 AC PLANT FRONT	1. Test Connections 2. Below Compressor 3. PPO Unit
02	NO. 9 AC PLANT BACK	1. Chiller Drain Valve 2. Hot Gas Bypass Valve No. 1 3. Hot Gas Bypass Valve No. 2 4. Below Chiller
03	REMOTE RECEIVER	1. Below Valves on Top of Receiver 2. Below Hose Connection
04	NOT USED	

H4-5. FWD REFR BOXES (5-41-0-L)

RELAY DETAILS

Parameter	Relay 1	Relay 2	Relay 3	Relay 4
Operation	Continuous	Continuous	Continuous	Continuous
Mode	System	System	System	System
Logic	Any One	Any One	Any One	Any One
Pulse (m)	03	03	03	03
Inhibit (h)	00	00	00	00
Day Time (h)	06	06	06	06
Day Factor	2.8	2.8	2.8	2.8
Night Time (h)	18	18	18	18
Night Factor	2.8	2.8	2.8	2.8
SAMM 01	X	X	X	X
SAMM 02	X	X	X	X
SAMM 03	NOT USED			
SAMM 04	NOT USED			

SAMM DETAILS

Address	Name	Alert	Alarm	Critical	Refrigerant	Cycle Time (mins)	Pipe Length (ft)
01	FREEZE RM NO. 1	0050	0300	0850	R134A	010	0100
02	PASSAGEWAY (5-41-0-L)	0050	0300	0850	R134A	010	0100
03	NOT USED						
04	NOT USED						

Recommended Sampling Locations for FWD REFR BOXES (5-41-0-L)

SAMM	Name	Sampling Locations
01	FREEZE RM NO. 1	1. TXV 2. Ovhd Center 3. 9” Above Deck Near Door
02	PASSAGEWAY (5-41-0-L)	1. Filter Driers on Liquid Line 2. Aft Bulkhead Near Deck
03	NOT USED	
04	NOT USED	

H4-6. FWD REFR BOXES (4-51-1-L)

RELAY DETAILS

Parameter	Relay 1	Relay 2	Relay 3	Relay 4
Operation	Continuous	Continuous	Continuous	Continuous
Mode	System	System	System	System
Logic	Any One	Any One	Any One	Any One
Pulse (m)	03	03	03	03
Inhibit (h)	00	00	00	00
Day Time (h)	06	06	06	06
Day Factor	2.8	2.8	2.8	2.8
Night Time (h)	18	18	18	18
Night Factor	2.8	2.8	2.8	2.8
SAMM 01	X	X	X	X
SAMM 02	X	X	X	X
SAMM 03	X	X	X	X
SAMM 04	X	X	X	X

SAMM DETAILS

Address	Name	Alert	Alarm	Critical	Refrigerant	Cycle Time (mins)	Pipe Length (ft)
01	CHILL RM NO. 1	0050	0300	0850	R134A	010	0100
02	CHILL RM NO. 2	0050	0300	0850	R134A	010	0100
03	PASSAGEWAY (4-51-1-L)	0050	0300	0850	R134A	010	0100
04	PASSAGEWAY (5-52-0-L)	0050	0300	0850	R134A	010	0100

Recommended Sampling Locations for FWD REFR BOXES (4-51-1-L)

SAMM	Name	Sampling Locations
01	CHILL RM NO. 1	1. Ovhd Fwd Port Corner 2. Ovhd Fwd Stbd Corner 3. Ovhd Aft Center 4. 9” Above Deck Near Door
02	CHILL RM NO. 2	1. Ovhd Fwd Port Corner 2. Ovhd Fwd Stbd Corner 3. Ovhd Aft Center 4. 9” Above Deck Near Door
03	PASSAGEWAY (4-51-1-L)	1. Filter Driers on Liquid Line 2. By TXVs 3. Aft Bulkhead Near Deck
04	PASSAGEWAY (5-52-0-L)	1. Filter Driers on Liquid Line 2. By TXVs 3. Aft Bulkhead Near Deck

H4-7. AFT REFR BOXES (5-180-0-L)

RELAY DETAILS

Parameter	Relay 1	Relay 2	Relay 3	Relay 4
Operation	Continuous	Continuous	Continuous	Continuous
Mode	System	System	System	System
Logic	Any One	Any One	Any One	Any One
Pulse (m)	03	03	03	03
Inhibit (h)	00	00	00	00
Day Time (h)	06	06	06	06
Day Factor	2.8	2.8	2.8	2.8
Night Time (h)	18	18	18	18
Night Factor	2.8	2.8	2.8	2.8
SAMM 01	X	X	X	X
SAMM 02	X	X	X	X
SAMM 03	X	X	X	X
SAMM 04	NOT USED			

SAMM DETAILS

Address	Name	Alert	Alarm	Critical	Refrigerant	Cycle Time (mins)	Pipe Length (ft)
01	CHILL RM NO. 3	0050	0300	0850	R134A	010	0100
02	PHOTO STRM (5-180-02-A)	0050	0300	0850	R134A	010	0100
03	PASSAGEWAY (5-180-0-L)	0050	0300	0850	R134A	010	0100
04	NOT USED						

Recommended Sampling Locations for AFT REFR BOXES (5-180-0-L)

SAMM	Name	Sampling Locations
01	CHILL RM NO. 3	1. Ovhd Fwd Port Corner 2. Ovhd Fwd Stbd Corner 3. Ovhd Aft Center 4. 9” Above Deck Near Door
02	PHOTO STRM (5-180-02-A)	1. Ovhd Aft Corner 2. 9” Above Deck Near Door
03	PASSAGEWAY (5-180-0-L)	1. Filter Driers on Liquid Line 2. By TXVs 3. Aft Bulkhead Near Deck
04	NOT USED	

H4-8. AFT REFR BOXES (5-196-1-L)

RELAY DETAILS

Parameter	Relay 1	Relay 2	Relay 3	Relay 4
Operation	Continuous	Continuous	Continuous	Continuous
Mode	System	System	System	System
Logic	Any One	Any One	Any One	Any One
Pulse (m)	03	03	03	03
Inhibit (h)	00	00	00	00
Day Time (h)	06	06	06	06
Day Factor	2.8	2.8	2.8	2.8
Night Time (h)	18	18	18	18
Night Factor	2.8	2.8	2.8	2.8
SAMM 01	X	X	X	X
SAMM 02	X	X	X	X
SAMM 03	X	X	X	X
SAMM 04	NOT USED			

SAMM DETAILS

Address	Name	Alert	Alarm	Critical	Refrigerant	Cycle Time (mins)	Pipe Length (ft)
01	FREEZE RM NO. 2	0050	0300	0850	R134A	010	0100
02	FREEZE RM NO. 3	0050	0300	0850	R134A	010	0100
03	PASSAGEWAY (5-196-1-L)	0050	0300	0850	R134A	010	0100
04	NOT USED						

Recommended Sampling Locations for AFT REFR BOXES (5-196-1-L)

SAMM	Name	Sampling Locations
01	FREEZE RM NO. 2	1. TXV 2. Ovhd Center 3. 9” Above Deck Near Door
02	FREEZE RM NO. 3	1. TXV 2. Ovhd Center 3. 9” Above Deck Near Door
03	PASSAGEWAY (5-196-1-L)	1. Upper Dehydrator Area for No. 2 2. Lower Dehydrator Area for No. 2 3. Upper Dehydrator Area for No. 3 4. Lower Dehydrator Area for No. 3
04	NOT USED	

APPENDIX I

(DD 963 CLASS)

I-1. AC PLANTS NO. 1 & 2

RELAY DETAILS

Parameter	Relay 1	Relay 2	Relay 3	Relay 4
Operation	Continuous	Continuous	Continuous	Continuous
Mode	System	System	System	System
Logic	Any One	Any One	Any One	Any One
Pulse (m)	03	03	03	03
Inhibit (h)	00	00	00	00
Day Time (h)	06	06	06	06
Day Factor	2.8	2.8	2.8	2.8
Night Time (h)	18	18	18	18
Night Factor	2.8	2.8	2.8	2.8
SAMM 01	X	X	X	X
SAMM 02	X	X	X	X
SAMM 03	X	X	X	X
SAMM 04	X	X	X	X

SAMM DETAILS

Address	Name	Alert	Alarm	Critical	Refrigerant	Cycle Time (mins)	Pipe Length (ft)
01	NO. 1 AC PLANT FRONT	0050	0300	0850	R114 or R236FA	010	0100
02	NO. 1 AC PLANT BACK	0050	0300	0850	R114 or R236FA	010	0100
03	NO. 2 AC PLANT FRONT	0050	0300	0850	R114 or R236FA	010	0100
04	NO. 2 AC PLANT BACK	0050	0300	0850	R114 or R236FA	010	0100

Recommended Sampling Locations for AC PLANTS NO. 1 & 2

SAMM	Name	Sampling Locations
01	NO. 1 AC PLANT FRONT	1. C/D Valve 2. Hot Gas Bypass Valve 3. Test Connections
02	NO. 1 AC PLANT BACK	1. Near Bottom of Chiller 2. Below Compressor
03	NO. 2 AC PLANT FRONT	1. C/D Valve 2. Hot Gas Bypass Valve 3. Test Connections
04	NO. 2 AC PLANT BACK	1. Near Bottom of Chiller 2. Below Compressor

I-2. AC PLANT NO. 3

RELAY DETAILS

Parameter	Relay 1	Relay 2	Relay 3	Relay 4
Operation	Continuous	Continuous	Continuous	Continuous
Mode	System	System	System	System
Logic	Any One	Any One	Any One	Any One
Pulse (m)	03	03	03	03
Inhibit (h)	00	00	00	00
Day Time (h)	06	06	06	06
Day Factor	2.8	2.8	2.8	2.8
Night Time (h)	18	18	18	18
Night Factor	2.8	2.8	2.8	2.8
SAMM 01	X	X	X	X
SAMM 02	X	X	X	X
SAMM 03	X	X	X	X
SAMM 04	NOT USED			

SAMM DETAILS

Address	Name	Alert	Alarm	Critical	Refrigerant	Cycle Time (mins)	Pipe Length (ft)
01	NO. 3 AC PLANT FRONT	0050	0300	0850	R114 or R236FA	010	0100
02	NO. 3 AC PLANT BACK	0050	0300	0850	R114 or R236FA	010	0100
03	PURGE PUMPOUT UNIT	0050	0300	0850	R114 or R236FA	010	0100
04	NOT USED						

Recommended Sampling Locations for AC PLANT NO. 3

SAMM	Name	Sampling Locations
01	NO. 3 AC PLANT FRONT	1. C/D Valve 2. Hot Gas Bypass Valve 3. Test Connections
02	NO. 3 AC PLANT BACK	1. Near Bottom of Chiller 2. Below Compressor
03	PURGE PUMPOUT UNIT	1. C/D Valve 2. Hot Gas Bypass Valve 3. Test Connections
04	NOT USED	

I-3. REFR SYSTEMS

RELAY DETAILS

Parameter	Relay 1	Relay 2	Relay 3	Relay 4
Operation	Continuous	Continuous	Continuous	Continuous
Mode	System	System	System	System
Logic	Any One	Any One	Any One	Any One
Pulse (m)	03	03	03	03
Inhibit (h)	00	00	00	00
Day Time (h)	06	06	06	06
Day Factor	2.8	2.8	2.8	2.8
Night Time (h)	18	18	18	18
Night Factor	2.8	2.8	2.8	2.8
SAMM 01	X	X	X	X
SAMM 02	X	X	X	X
SAMM 03	X	X	X	X
SAMM 04	X	X	X	X
SAMM 05	X	X	X	X
SAMM 06	X	X	X	X
SAMM 07	X	X	X	X
SAMM 08	X	X	X	X

SAMM DETAILS

Address	Name	Alert	Alarm	Critical	Refrigerant	Cycle Time (mins)	Pipe Length (ft)
01	NO. 1 REFR PLANT	0050	0300	0850	R134A	010	0100
02	NO. 2 REFR PLANT	0050	0300	0850	R134A	010	0100
03	FREEZE STRM NO. 1	0050	0300	0850	R134A	010	0100
04	FREEZE STRM NO. 2	0050	0300	0850	R134A	010	0100
05	CHILL STRM NO. 1	0050	0300	0850	R134A	010	0100
06	CHILL STRM NO. 2	0050	0300	0850	R134A	010	0100
07	STORES HANDLING RM	0050	0300	0850	R134A	010	0100
08	REFR MACH SPACE	0050	0300	0850	R134A	010	0100

Recommended Sampling Locations for REFR SYSTEMS

SAMM	Name	Sampling Locations
01	NO. 1 REFR PLANT	1. Gageboard 2. Between Dehydrator and C/D Valve 3. Compressor Shaft Seal 4. King Solenoid Valve Area
02	NO. 2 REFR PLANT	1. Gageboard 2. Between Dehydrator and C/D Valve 3. Compressor Shaft Seal 4. King Solenoid Valve Area
03	FREEZE STRM NO. 1	1. Ovhd Center 2. 9” Above Deck Near Door
04	FREEZE STRM NO. 2	1. Ovhd Center 2. 9” Above Deck Near Door
05	CHILL STRM NO. 1	1. Ovhd Center 2. 9” Above Deck Near Door
06	CHILL STRM NO. 2	1. Ovhd Center 2. 9” Above Deck Near Door
07	STORES HANDLING RM	1. TXV Area in Chill Strm No. 1 2. TXV Area in Freeze Strm No. 1 3. TXV Area in Freeze Strm No. 2
08	REFR MACH SPACE	1. TXV 2. Filter Drier

APPENDIX J

(DDG 51 CLASS)

J-1. REFR SYSTEMS

RELAY DETAILS

Parameter	Relay 1	Relay 2	Relay 3	Relay 4
Operation	Continuous	Continuous	Continuous	Continuous
Mode	System	System	System	System
Logic	Any One	Any One	Any One	Any One
Pulse (m)	03	03	03	03
Inhibit (h)	00	00	00	00
Day Time (h)	06	06	06	06
Day Factor	2.8	2.8	2.8	2.8
Night Time (h)	18	18	18	18
Night Factor	2.8	2.8	2.8	2.8
SAMM 01	X	X	X	X
SAMM 02	X	X	X	X
SAMM 03	X	X	X	X
SAMM 04	X	X	X	X
SAMM 05	X	X	X	X
SAMM 06	X	X	X	X
SAMM 07	NOT USED			
SAMM 08	NOT USED			

SAMM DETAILS

Address	Name	Alert	Alarm	Critical	Refrigerant	Cycle Time (mins)	Pipe Length (ft)
01	NO. 1 REFR PLANT	0050	0300	0850	R134A	010	0100
02	CHILL STRM	0050	0300	0850	R134A	010	0100
03	NO. 2 REFR PLANT	0050	0300	0850	R134A	010	0100
04	FREEZE STRM	0050	0300	0850	R134A	010	0100
05	REFR CONTROLS	0050	0300	0850	R134A	010	0100
06	STORES HANDLING RM	0050	0300	0850	R134A	010	0100
07	NOT USED						
08	NOT USED						

Recommended Sampling Locations for REFR SYSTEMS

SAMM	Name	Sampling Locations
01	NO. 1 REFR PLANT	1. Behind Gageboard 2. Between Dehydrator and C/D Valve 3. Below Compressor Shaft Seal 4. King Solenoid Valve Area
02	CHILL STRM	1. Ovhd Center Near Unit Coolers 2. 9” Above Deck Near Door
03	NO. 2 REFR PLANT	1. Behind Gageboard 2. Between Dehydrator and C/D Valve 3. Below Compressor Shaft Seal 4. King Solenoid Valve Area
04	FREEZE STRM	1. Ovhd Center Near Unit Coolers 2. 9” Above Deck Near Door
05	REFR CONTROLS	1. Fwd Box Controls Near Solenoid 2. Aft Box Controls Near Solenoid
06	STORES HANDLING RM	1. At TXVs 2. At Filter Driers or TXVs
07	NOT USED	
08	NOT USED	

J-2. AC PLANT NO. 1

RELAY DETAILS

Parameter	Relay 1	Relay 2	Relay 3	Relay 4
Operation	Continuous	Continuous	Continuous	Continuous
Mode	System	System	System	System
Logic	Any One	Any One	Any One	Any One
Pulse (m)	03	03	03	03
Inhibit (h)	00	00	00	00
Day Time (h)	06	06	06	06
Day Factor	2.8	2.8	2.8	2.8
Night Time (h)	18	18	18	18
Night Factor	2.8	2.8	2.8	2.8
SAMM 01	X	X	X	X
SAMM 02	X	X	X	X
SAMM 03	X	X	X	X
SAMM 04	NOT USED			

SAMM DETAILS

Address	Name	Alert	Alarm	Critical	Refrigerant	Cycle Time (mins)	Pipe Length (ft)
01	NO. 1 AC PLANT BACK	0050	0300	0850	R114, R236FA, or R134A	010	0100
02	NO. 1 AC PLANT FRONT	0050	0300	0850	R114, R236FA, or R134A	010	0100
03	PPO UNIT	0050	0300	0850	R114, R236FA, or R134A	010	0100
04	NOT USED						

Recommended Sampling Locations for AC PLANT NO. 1

SAMM	Name	Sampling Locations
01	NO. 1 AC PLANT BACK	1. Near Bottom of Chiller 2. Below Compressor 3. CWCV
02	NO. 1 AC PLANT FRONT	1. C/D Valve 2. Hot Gas Bypass Valve 3. Test Connections at Gageboard or Control Panel
03	PPO UNIT	1. At PPO Unit
04	NOT USED	

J-3. AC PLANTS NO. 2 & 3

RELAY DETAILS

Parameter	Relay 1	Relay 2	Relay 3	Relay 4
Operation	Continuous	Continuous	Continuous	Continuous
Mode	System	System	System	System
Logic	Any One	Any One	Any One	Any One
Pulse (m)	03	03	03	03
Inhibit (h)	00	00	00	00
Day Time (h)	06	06	06	06
Day Factor	2.8	2.8	2.8	2.8
Night Time (h)	18	18	18	18
Night Factor	2.8	2.8	2.8	2.8
SAMM 01	X	X	X	X
SAMM 02	X	X	X	X
SAMM 03	X	X	X	X
SAMM 04	X	X	X	X

SAMM DETAILS

Address	Name	Alert	Alarm	Critical	Refrigerant	Cycle Time (mins)	Pipe Length (ft)
01	NO. 2 AC PLANT BACK	0050	0300	0850	R114, R236FA, or R134A	010	0100
02	NO. 2 AC PLANT FRONT	0050	0300	0850	R114, R236FA, or R134A	010	0100
03	NO. 3 AC PLANT BACK	0050	0300	0850	R114, R236FA, or R134A	010	0100
04	NO. 3 AC PLANT FRONT	0050	0300	0850	R114, R236FA, or R134A	010	0100

Recommended Sampling Locations for AC PLANTS NO. 2 & 3

SAMM	Name	Sampling Locations
01	NO. 2 AC PLANT BACK	1. Near Bottom of Chiller 2. Below Compressor 3. CWCV
02	NO. 2 AC PLANT FRONT	1. C/D Valve 2. Hot Gas Bypass Valve 3. Test Connections at Gageboard or Control Panel
03	NO. 3 AC PLANT BACK	1. Near Bottom of Chiller 2. Below Compressor 3. CWCV
04	NO. 3 AC PLANT FRONT	1. C/D Valve 2. Hot Gas Bypass Valve 3. Test Connections at Gageboard or Control Panel

J-4. AC PLANT NO. 4

RELAY DETAILS

Parameter	Relay 1	Relay 2	Relay 3	Relay 4
Operation	Continuous	Continuous	Continuous	Continuous
Mode	System	System	System	System
Logic	Any One	Any One	Any One	Any One
Pulse (m)	03	03	03	03
Inhibit (h)	00	00	00	00
Day Time (h)	06	06	06	06
Day Factor	2.8	2.8	2.8	2.8
Night Time (h)	18	18	18	18
Night Factor	2.8	2.8	2.8	2.8
SAMM 01	X	X	X	X
SAMM 02	X	X	X	X
SAMM 03	X	X	X	X
SAMM 04	NOT USED			

SAMM DETAILS

Address	Name	Alert	Alarm	Critical	Refrigerant	Cycle Time (mins)	Pipe Length (ft)
01	NO. 4 AC PLANT FRONT	0050	0300	0850	R114, R236FA, or R134A	010	0100
02	NO. 4 AC PLANT BACK	0050	0300	0850	R114, R236FA, or R134A	010	0100
03	PPO UNIT	0050	0300	0850	R114, R236FA, or R134A	010	0100
04	NOT USED						

Recommended Sampling Locations for AC PLANT NO. 4

SAMM	Name	Sampling Locations
02	NO. 4 AC PLANT FRONT	1. C/D Valve 2. Hot Gas Bypass Valve 3. Test Connections at Gageboard or Control Panel
01	NO. 4 AC PLANT BACK	1. Near Bottom of Chiller 2. Below Compressor 3. CWCV
03	PPO UNIT	1. At PPO Unit
04	NOT USED	

APPENDIX K

(FFG 7 CLASS)

K-1. AC PLANT NO. 1

RELAY DETAILS

Parameter	Relay 1	Relay 2	Relay 3	Relay 4
Operation	Continuous	Continuous	Continuous	Continuous
Mode	System	System	System	System
Logic	Any One	Any One	Any One	Any One
Pulse (m)	03	03	03	03
Inhibit (h)	00	00	00	00
Day Time (h)	06	06	06	06
Day Factor	2.8	2.8	2.8	2.8
Night Time (h)	18	18	18	18
Night Factor	2.8	2.8	2.8	2.8
SAMM 01	X	X	X	X
SAMM 02	X	X	X	X
SAMM 03	X	X	X	X
SAMM 04	X	X	X	X

SAMM DETAILS

Address	Name	Alert	Alarm	Critical	Refrigerant	Cycle Time (mins)	Pipe Length (ft)
01	NO. 1 AC PLANT COMPRESSOR	0050	0300	0850	R134A	010	0100
02	VALVES	0050	0300	0850	R134A	010	0100
03	COND/RCVR	0050	0300	0850	R134A	010	0100
04	CHILLER	0050	0300	0850	R134A	010	0100

Recommended Sampling Locations for AC PLANT NO. 1

SAMM	Name	Sampling Locations
01	NO. 1 AC PLANT COMPRESSOR	1. Compressor Pump End 2. Compressor Seal End
02	VALVES	1. Unloader Solenoids 2. Test Connections on Gageboard
03	COND/RCVR	1. Chiller Dehydrator/Charging Valve 2. TXV
04	CHILLER	1. King Solenoid Valve 2. Below Chiller Centerline

K-2. AC PLANTS NO. 2 & 3

RELAY DETAILS

Parameter	Relay 1	Relay 2	Relay 3	Relay 4
Operation	Continuous	Continuous	Continuous	Continuous
Mode	System	System	System	System
Logic	Any One	Any One	Any One	Any One
Pulse (m)	03	03	03	03
Inhibit (h)	00	00	00	00
Day Time (h)	06	06	06	06
Day Factor	2.8	2.8	2.8	2.8
Night Time (h)	18	18	18	18
Night Factor	2.8	2.8	2.8	2.8
SAMM 01	X	X	X	X
SAMM 02	X	X	X	X
SAMM 03	X	X	X	X
SAMM 04	X	X	X	X

SAMM DETAILS

Address	Name	Alert	Alarm	Critical	Refrigerant	Cycle Time (mins)	Pipe Length (ft)
01	NO. 2 AC PLANT COMPRESSOR	0050	0300	0850	R134A	010	0100
02	NO. 3 AC PLANT COMPRESSOR	0050	0300	0850	R134A	010	0100
03	NO. 2 COND/RCVR	0050	0300	0850	R134A	010	0100
04	NO. 3 COND/RCVR	0050	0300	0850	R134A	010	0100

Recommended Sampling Locations for AC PLANTS NO. 2 & 3

SAMM	Name	Sampling Locations
01	NO. 2 AC PLANT COMPRESSOR	1. Compressor Pump End 2. Compressor Seal End 3. Unloader Solenoid 4. Test Connections on Gageboard
02	NO. 3 AC PLANT COMPRESSOR	1. Compressor Pump End 2. Compressor Seal End 3. Unloader Solenoid 4. Test Connections on Gageboard
03	NO. 2 COND/RCVR	1. Chiller Dehydrator/Charging Valve 2. TXV 3. King Solenoid Valve 4. Below Chiller Centerline
04	NO. 3 COND/RCVR	1. Chiller Dehydrator/Charging Valve 2. TXV 3. King Solenoid Valve 4. Below Chiller Centerline

K-3. REFR SYSTEMS

RELAY DETAILS

Parameter	Relay 1	Relay 2	Relay 3	Relay 4
Operation	Continuous	Continuous	Continuous	Continuous
Mode	System	System	System	System
Logic	Any One	Any One	Any One	Any One
Pulse (m)	03	03	03	03
Inhibit (h)	00	00	00	00
Day Time (h)	06	06	06	06
Day Factor	2.8	2.8	2.8	2.8
Night Time (h)	18	18	18	18
Night Factor	2.8	2.8	2.8	2.8
SAMM 01	X	X	X	X
SAMM 02	X	X	X	X
SAMM 03	X	X	X	X
SAMM 04	X	X	X	X
SAMM 05	X	X	X	X
SAMM 06	X	X	X	X
SAMM 07	X	X	X	X
SAMM 08	NOT USED			

SAMM DETAILS

Address	Name	Alert	Alarm	Critical	Refrigerant	Cycle Time (mins)	Pipe Length (ft)
01	NO. 1 REFR COMPRESSOR	0050	0300	0850	R134A	010	0100
02	NO. 2 REFR COMPRESSOR	0050	0300	0850	R134A	010	0100
03	COND/RCVR	0050	0300	0850	R134A	010	0100
04	PASSAGEWAY (3-188-0-L)	0050	0300	0850	R134A	010	0100
05	CHILL STRM NO. 1	0050	0300	0850	R134A	010	0100
06	CHILL STRM NO. 2	0050	0300	0850	R134A	010	0100
07	FREEZE STRM	0050	0300	0850	R134A	010	0100
08	NOT USED						

Recommended Sampling Locations for REFR SYSTEMS

SAMM	Name	Sampling Locations
01	NO. 1 REFR PLANT COM-PRESSOR	1. Shaft Seal 2. Oil Cooler Manifold Strainer 3. Test Connections on Gageboard 4. Pump End Near Oil Drain Valve
02	NO. 2 REFR PLANT COM-PRESSOR	1. Shaft Seal 2. Oil Cooler Manifold Strainer 3. Test Connections on Gageboard 4. Pump End Near Oil Drain Valve
03	COND/RCVR	1. Dehydrator/Charging Valve Area 2. Rcvr Drain Valve Area 3. Purge Valve Area 4. WRV Area
04	PASSAGEWAY (3-188-0-L)	1. No. 1 Chill TXV 2. No. 2 Chill TXV
05	CHILL STRM NO. 1	1. Ovhd Center 2. 9” Above Deck Near Door
06	CHILL STRM NO. 2	1. Ovhd Center 2. 9” Above Deck Near Door
07	FREEZE STRM	1. Ovhd Center 2. 9” Above Deck Near Door
08	NOT USED	

APPENDIX L

(LCC)

SECTION L1

(LCC 19)

L1-1. AC PLANTS NO. 1, 2, & 3, AND REFR PLANTS

RELAY DETAILS

Parameter	Relay 1	Relay 2	Relay 3	Relay 4
Operation	Continuous	Continuous	Continuous	Continuous
Mode	System	System	System	System
Logic	Any One	Any One	Any One	Any One
Pulse (m)	03	03	03	03
Inhibit (h)	00	00	00	00
Day Time (h)	06	06	06	06
Day Factor	2.8	2.8	2.8	2.8
Night Time (h)	18	18	18	18
Night Factor	2.8	2.8	2.8	2.8
SAMM 01	X	X	X	X
SAMM 02	X	X	X	X
SAMM 03	X	X	X	X
SAMM 04	X	X	X	X
SAMM 05	X	X	X	X
SAMM 06	X	X	X	X
SAMM 07	X	X	X	X
SAMM 08	X	X	X	X

SAMM DETAILS

Address	Name	Alert	Alarm	Critical	Refrigerant	Cycle Time (mins)	Pipe Length (ft)
01	NO. 1 AC PLANT	0050	0300	0850	R11 or R236FA	010	0100
02	NO. 2 AC PLANT	0050	0300	0850	R11 or R236FA	010	0100
03	NO. 3 AC PLANT	0050	0300	0850	R11 or R236FA	010	0100
04	NO. 2 & 3 PPO Units	0050	0300	0850	R11 or R236FA	010	0100
05	NO. 1 REFR COMPRESSOR	0050	0300	0850	R134A	010	0100
06	NO. 2 REFR COMPRESSOR	0050	0300	0850	R134A	010	0100
07	NO. 1 REFR CONDENSER	0050	0300	0850	R134A	010	0100
08	NO. 2 REFR CONDENSER	0050	0300	0850	R134A	010	0100

Recommended Sampling Locations for AC PLANTS NO. 1, 2, & 3, AND REFR PLANTS

SAMM	Name	Sampling Locations
01	NO. 1 AC PLANT	1. C/D Valve (Fwd) 2. C/D Valve (Aft) 3. Below Condenser 4. Below No. 1 PPO Unit
02	NO. 2 AC PLANT	1. C/D Valve (Fwd) 2. C/D Valve (Aft) 3. Below Condenser 4. Condenser Purge Valve
03	NO. 3 AC PLANT	1. C/D Valve (Fwd) 2. C/D Valve (Aft) 3. Below Condenser 4. Condenser Purge Valve
04	NO. 2 & 3 PPO UNITS	1. Below No. 2 PPO Unit 2. Below No. 3 PPO Unit
05	NO. 1 REFR COMPRESSOR	1. Test Connections on Gageboard 2. Shaft Seal 3. Oil Drain Valve 4. Oil Cooler Manifold
06	NO. 2 REFR COMPRESSOR	1. Test Connections on Gageboard 2. Shaft Seal 3. Oil Drain Valve 4. Oil Cooler Manifold
07	NO. 1 REFR CONDENSER	1. Drain Valve 2. Purge Valve 3. Oil Drain Valve 4. WRV
08	NO. 2 REFR CONDENSER	1. Drain Valve 2. Purge Valve 3. Oil Drain Valve 4. WRV

L1-2. AC PLANTS NO. 4 & 5

RELAY DETAILS

Parameter	Relay 1	Relay 2	Relay 3	Relay 4
Operation	Continuous	Continuous	Continuous	Continuous
Mode	System	System	System	System
Logic	Any One	Any One	Any One	Any One
Pulse (m)	03	03	03	03
Inhibit (h)	00	00	00	00
Day Time (h)	06	06	06	06
Day Factor	2.8	2.8	2.8	2.8
Night Time (h)	18	18	18	18
Night Factor	2.8	2.8	2.8	2.8
SAMM 01	X	X	X	X
SAMM 02	X	X	X	X
SAMM 03	X	X	X	X
SAMM 04	NOT USED			

SAMM DETAILS

Address	Name	Alert	Alarm	Critical	Refrigerant	Cycle Time (mins)	Pipe Length (ft)
01	NO. 4 AC PLANT	0050	0300	0850	R11 or R236FA	010	0100
02	NO. 5 AC PLANT	0050	0300	0850	R11 or R236FA	010	0100
03	PPO UNITS	0050	0300	0850	R11 or R236FA	010	0100
04	NOT USED						

Recommended Sampling Locations for AC PLANTS NO. 4 & 5

SAMM	Name	Sampling Locations
01	NO. 4 AC PLANT	1. C/D Valve (Fwd) 2. C/D Valve (Aft) 3. Condenser Purge Valve 4. Below Condenser
02	NO. 5 AC PLANT	1. C/D Valve (Fwd) 2. C/D Valve (Aft) 3. Condenser Purge Valve 4. Below Condenser
03	PPO UNITS	1. Below No. 4 PPO Unit 2. Below No. 5 PPO Unit
04	NOT USED	

L1-3. AC PLANTS NO. 6 & 7

RELAY DETAILS

Parameter	Relay 1	Relay 2	Relay 3	Relay 4
Operation	Continuous	Continuous	Continuous	Continuous
Mode	System	System	System	System
Logic	Any One	Any One	Any One	Any One
Pulse (m)	03	03	03	03
Inhibit (h)	00	00	00	00
Day Time (h)	06	06	06	06
Day Factor	2.8	2.8	2.8	2.8
Night Time (h)	18	18	18	18
Night Factor	2.8	2.8	2.8	2.8
SAMM 01	X	X	X	X
SAMM 02	X	X	X	X
SAMM 03	X	X	X	X
SAMM 04	NOT USED			

SAMM DETAILS

Address	Name	Alert	Alarm	Critical	Refrigerant	Cycle Time (mins)	Pipe Length (ft)
01	NO. 6 AC PLANT	0050	0300	0850	R11 or R236FA	010	0100
02	RECEIVER/PPO UNITS	0050	0300	0850	R11 or R236FA	010	0100
03	NO. 7 AC PLANT	0050	0300	0850	R11 or R236FA	010	0100
04	NOT USED						

Recommended Sampling Locations for AC PLANTS NO. 6 & 7

SAMM	Name	Sampling Locations
01	NO. 6 AC PLANT	1. Hot Gas Bypass Valve 2. Below Condenser 3. Gageboard 4. Charging Valve
02	RECEIVER/PPO UNITS	1. Gageboard 2. No. 6 PPO Unit 3. No. 7 PPO Unit 4. Below Receiver
03	NO. 7 AC PLANT	1. Hot Gas Bypass Valve 2. Below Condenser 3. Gageboard 4. Charging Valve
04	NOT USED	

L1-4. REFR SPACES

RELAY DETAILS

Parameter	Relay 1	Relay 2	Relay 3	Relay 4
Operation	Continuous	Continuous	Continuous	Continuous
Mode	System	Group	System	System
Logic	Any One	Any One	Any One	Any One
Pulse (m)	03	03	03	03
Inhibit (h)	00	00	00	00
Day Time (h)	06	06	06	06
Day Factor	2.8	2.8	2.8	2.8
Night Time (h)	18	18	18	18
Night Factor	2.8	2.8	2.8	2.8
SAMM 01	X	X	X	X
SAMM 02	X	X	X	X
SAMM 03	X	X	X	X
SAMM 04	X		X	X
SAMM 05	X		X	X
SAMM 06	X		X	X
SAMM 07	X		X	X
SAMM 08	NOT USED			

SAMM DETAILS

Address	Name	Alert	Alarm	Critical	Refrigerant	Cycle Time (mins)	Pipe Length (ft)
01	NO. 1 CHILL STRM	0050	0300	0850	R134A	010	0100
02	NO. 2 CHILL STRM	0050	0300	0850	R134A	010	0100
03	FREEZE STRM	0050	0300	0850	R134A	010	0100
04	NO. 1 CHILL STRM TXV/ STRAINER	0050	0300	0850	R134A	010	0100
05	NO. 2 CHILL STRM TXV/ STRAINER	0050	0300	0850	R134A	010	0100
06	FREEZE STRM TXV/ STRAINER	0050	0300	0850	R134A	010	0100
07	GAGEBOARD	0050	0300	0850	R134A	010	0100
08	NOT USED						

Recommended Sampling Locations for REFR SPACES

SAMM	Name	Sampling Locations
01	NO. 1 CHILL STRM	1. Ovhd Center 2. 9” Above Deck Near Door
02	NO. 2 CHILL STRM	1. Ovhd Center 2. 9” Above Deck Near Door
03	FREEZE STRM	1. Ovhd Center 2. 9” Above Deck Near Door
04	NO. 1 CHILL STRM TXV/ STRAINER	1. TXV/Strainer Area 2. Service Valves
05	NO. 2 CHILL STRM TXV/ STRAINER	1. TXV/Strainer Area 2. Service Valves
06	FREEZE STRM TXV/ STRAINER	1. TXV/Strainer Area 2. Service Valves
07	GAGEBOARD	1. Test Connections
08	NOT USED	

SECTION L2

(LCC 20)

L2-1. AC PLANTS NO. 1 & 2, AND REFR PLANTS

RELAY DETAILS

Parameter	Relay 1	Relay 2	Relay 3	Relay 4
Operation	Continuous	Continuous	Continuous	Continuous
Mode	System	System	System	System
Logic	Any One	Any One	Any One	Any One
Pulse (m)	03	03	03	03
Inhibit (h)	00	00	00	00
Day Time (h)	06	06	06	06
Day Factor	2.8	2.8	2.8	2.8
Night Time (h)	18	18	18	18
Night Factor	2.8	2.8	2.8	2.8
SAMM 01	X	X	X	X
SAMM 02	X	X	X	X
SAMM 03	X	X	X	X
SAMM 04	X	X	X	X
SAMM 05	X	X	X	X
SAMM 06	X	X	X	X
SAMM 07	X	X	X	X
SAMM 08	X	X	X	X

SAMM DETAILS

Address	Name	Alert	Alarm	Critical	Refrigerant	Cycle Time (mins)	Pipe Length (ft)
01	NO. 1 AC PLANT	0050	0300	0850	R114 or R236FA	010	0100
02	NO. 1 & 2 RECEIVERS	0050	0300	0850	R114 or R236FA	010	0100
03	NO. 2 AC PLANT	0050	0300	0850	R114 or R236FA	010	0100
04	NO. 1 & 2 PPO UNITS	0050	0300	0850	R114 or R236FA	010	0100
05	NO. 1 REFR COMPRESSOR	0050	0300	0850	R134A	010	0100
06	NO. 2 REFR COMPRESSOR	0050	0300	0850	R134A	010	0100
07	NO. 1 REFR CONDENSER	0050	0300	0850	R134A	010	0100
08	NO. 2 REFR CONDENSER	0050	0300	0850	R134A	010	0100

Recommended Sampling Locations for AC PLANTS NO. 1 & 2, AND REFR PLANTS

SAMM	Name	Sampling Locations
01	NO. 1 AC PLANT	1. Relief Valves 2. Test Connections Below Microprocessor 3. Condenser Purge Valve 2. Below Condenser
02	NO. 1 & 2 RECEIVERS	1. C/D Valve No. 1 2. Relief Valve No. 1 3. C/D Valve No. 2 4. Relief Valve No. 2
03	NO. 2 AC PLANT	1. Relief Valves 2. Test Connections Below Microprocessor 3. Condenser Purge Valve 2. Below Condenser
04	NO. 1 & 2 PPO UNITS	1. PPO Unit Area
05	NO. 1 REFR COMPRESSOR	1. Test Connections on Gageboard 2. Shaft Seal 3. Oil Drain Valve 4. Oil Cooler Manifold
06	NO. 2 REFR COMPRESSOR	1. Test Connections on Gageboard 2. Shaft Seal 3. Oil Drain Valve 4. Oil Cooler Manifold
07	NO. 1 REFR CONDENSER	1. Charge Valve 2. Purge Valve 3. Dehydrator 4. WRV
08	NO. 2 REFR CONDENSER	1. Charge Valve 2. Purge Valve 3. Dehydrator 4. WRV

L2-2. AC PLANTS NO. 3 & 4

RELAY DETAILS

Parameter	Relay 1	Relay 2	Relay 3	Relay 4
Operation	Continuous	Continuous	Continuous	Continuous
Mode	System	System	System	System
Logic	Any One	Any One	Any One	Any One
Pulse (m)	03	03	03	03
Inhibit (h)	00	00	00	00
Day Time (h)	06	06	06	06
Day Factor	2.8	2.8	2.8	2.8
Night Time (h)	18	18	18	18
Night Factor	2.8	2.8	2.8	2.8
SAMM 01	X	X	X	X
SAMM 02	X	X	X	X
SAMM 03	X	X	X	X
SAMM 04	X	X	X	X

SAMM DETAILS

Address	Name	Alert	Alarm	Critical	Refrigerant	Cycle Time (mins)	Pipe Length (ft)
01	NO. 3 AC PLANT FRONT	0050	0300	0850	R114 or R236FA	010	0100
02	NO. 4 AC PLANT FRONT	0050	0300	0850	R114 or R236FA	010	0100
03	NO. 3 & 4 AC PLANT BACK	0050	0300	0850	R114 or R236FA	010	0100
04	RECEIVER/PPO UNITS	0050	0300	0850	R114 or R236FA	010	0100

Recommended Sampling Locations for AC PLANTS NO. 3 & 4

SAMM	Name	Sampling Locations
01	NO. 3 AC PLANT FRONT	1. C/D Valve 2. Test Connections 3. Relief Valve 2. Below Condenser
02	NO. 4 AC PLANT FRONT	1. C/D Valve 2. Test Connections 3. Relief Valve 2. Below Condenser
03	NO. 3 & 4 AC PLANT BACK	1. No. 3 Condenser Purge Valve 2. No. 4 Condenser Purge Valve
04	RECEIVER/PPO UNITS	1. Receiver Drain 2. Relief Valve 3. PPO Unit Area

L2-3. AC PLANTS NO. 5 & 6

RELAY DETAILS

Parameter	Relay 1	Relay 2	Relay 3	Relay 4
Operation	Continuous	Continuous	Continuous	Continuous
Mode	System	System	System	System
Logic	Any One	Any One	Any One	Any One
Pulse (m)	03	03	03	03
Inhibit (h)	00	00	00	00
Day Time (h)	06	06	06	06
Day Factor	2.8	2.8	2.8	2.8
Night Time (h)	18	18	18	18
Night Factor	2.8	2.8	2.8	2.8
SAMM 01	X	X	X	X
SAMM 02	X	X	X	X
SAMM 03	X	X	X	X
SAMM 04	NOT USED			

SAMM DETAILS

Address	Name	Alert	Alarm	Critical	Refrigerant	Cycle Time (mins)	Pipe Length (ft)
01	NO. 5 AC PLANT	0050	0300	0850	R114 or R236FA	010	0100
02	RECEIVER/PPO UNITS	0050	0300	0850	R114 or R236FA	010	0100
03	NO. 6 AC PLANT	0050	0300	0850	R114 or R236FA	010	0100
04	NOT USED						

Recommended Sampling Locations for AC PLANTS NO. 5 & 6

SAMM	Name	Sampling Locations
01	NO. 5 AC PLANT	1. Relief Valves 2. Test Connections Below Microprocessor 3. Condenser Purge Valve 2. Below Condenser
02	RECEIVER/PPO UNITS	1. C/D Valve 2. Relief Valve 3. PPO Unit Area
03	NO. 6 AC PLANT	1. Relief Valves 2. Test Connections Below Microprocessor 3. Condenser Purge Valve 2. Below Condenser
04	NOT USED	

L2-4. REFR SPACES

RELAY DETAILS

Parameter	Relay 1	Relay 2	Relay 3	Relay 4
Operation	Continuous	Continuous	Continuous	Continuous
Mode	System	Group	System	System
Logic	Any One	Any One	Any One	Any One
Pulse (m)	03	03	03	03
Inhibit (h)	00	00	00	00
Day Time (h)	06	06	06	06
Day Factor	2.8	2.8	2.8	2.8
Night Time (h)	18	18	18	18
Night Factor	2.8	2.8	2.8	2.8
SAMM 01	X	X	X	X
SAMM 02	X	X	X	X
SAMM 03	X	X	X	X
SAMM 04	X		X	X
SAMM 05	X		X	X
SAMM 06	X		X	X
SAMM 07	X		X	X
SAMM 08	NOT USED			

SAMM DETAILS

Address	Name	Alert	Alarm	Critical	Refrigerant	Cycle Time (mins)	Pipe Length (ft)
01	NO. 1 CHILL STRM	0050	0300	0850	R134A	010	0100
02	NO. 2 CHILL STRM	0050	0300	0850	R134A	010	0100
03	FREEZE STRM	0050	0300	0850	R134A	010	0100
04	NO. 1 CHILL STRM TXV/ STRAINER	0050	0300	0850	R134A	010	0100
05	NO. 2 CHILL STRM TXV/ STRAINER	0050	0300	0850	R134A	010	0100
06	FREEZE STRM TXV/ STRAINER	0050	0300	0850	R134A	010	0100
07	GAGEBOARD	0050	0300	0850	R134A	010	0100
08	NOT USED						

Recommended Sampling Locations for AC PLANTS NO. 1 & 2, AND REFR PLANTS

SAMM	Name	Sampling Locations
01	NO. 1 CHILL STRM	1. Ovhd Center 2. 9” Above Deck Near Door
02	NO. 2 CHILL STRM	1. Ovhd Center 2. 9” Above Deck Near Door
03	FREEZE STRM	1. Ovhd Center 2. 9” Above Deck Near Door
04	NO. 1 CHILL STRM TXV/ STRAINER	1. TXV/Strainer Area 2. Service Valves
05	NO. 2 CHILL STRM TXV/ STRAINER	1. TXV/Strainer Area 2. Service Valves
06	FREEZE STRM TXV/ STRAINER	1. TXV/Strainer Area 2. Service Valves
07	GAGEBOARD	1. Test Connections
08	NOT USED	

APPENDIX M

(LHA 1 CLASS)

M-1. AC PLANTS NO. 1 & 2

RELAY DETAILS

Parameter	Relay 1	Relay 2	Relay 3	Relay 4
Operation	Continuous	Continuous	Continuous	Continuous
Mode	System	System	System	System
Logic	Any One	Any One	Any One	Any One
Pulse (m)	03	03	03	03
Inhibit (h)	00	00	00	00
Day Time (h)	06	06	06	06
Day Factor	2.8	2.8	2.8	2.8
Night Time (h)	18	18	18	18
Night Factor	2.8	2.8	2.8	2.8
SAMM 01	X	X	X	X
SAMM 02	X	X	X	X
SAMM 03	X	X	X	X
SAMM 04	X	X	X	X

SAMM DETAILS

Address	Name	Alert	Alarm	Critical	Refrigerant	Cycle Time (mins)	Pipe Length (ft)
01	NO. 1 AC PLANT FRONT	0050	0300	0850	R114 or R236FA	010	0100
02	NO. 1 AC PLANT BACK	0050	0300	0850	R114 or R236FA	010	0100
03	NO. 2 AC PLANT FRONT	0050	0300	0850	R114 or R236FA	010	0100
04	NO. 2 AC PLANT BACK	0050	0300	0850	R114 or R236FA	010	0100

Recommended Sampling Locations for REFR SYSTEMS

SAMM	Name	Sampling Locations
01	NO. 1 AC PLANT FRONT	1. Test Connections 2. Hot Gas Bypass Valve No. 1 3. Hot Gas Bypass Valve No. 2 4. Charging Valve
02	NO. 1 AC PLANT BACK	1. Below PPO Unit 2. Chiller Low 3. Compressor 4. Receiver Hose Connections
03	NO. 2 AC PLANT FRONT	1. Test Connections 2. Hot Gas Bypass Valve No. 1 3. Hot Gas Bypass Valve No. 2 4. Charging Valve
04	NO. 2 AC PLANT BACK	1. Below PPO Unit 2. Chiller Low 3. Compressor

M-2. AC PLANTS NO. 3, 4, & 5

RELAY DETAILS

Parameter	Relay 1	Relay 2	Relay 3	Relay 4
Operation	Continuous	Continuous	Continuous	Continuous
Mode	System	System	System	System
Logic	Any One	Any One	Any One	Any One
Pulse (m)	03	03	03	03
Inhibit (h)	00	00	00	00
Day Time (h)	06	06	06	06
Day Factor	2.8	2.8	2.8	2.8
Night Time (h)	18	18	18	18
Night Factor	2.8	2.8	2.8	2.8
SAMM 01	X	X	X	X
SAMM 02	X	X	X	X
SAMM 03	X	X	X	X
SAMM 04	X	X	X	X

SAMM DETAILS

Address	Name	Alert	Alarm	Critical	Refrigerant	Cycle Time (mins)	Pipe Length (ft)
01	NO. 3 AC PLANT	0050	0300	0850	R114 or R236FA	010	0100
02	NO. 4 AC PLANT	0050	0300	0850	R114 or R236FA	010	0100
03	NO. 5 AC PLANT	0050	0300	0850	R114 or R236FA	010	0100
04	REMOTE RECEIVERS	0050	0300	0850	R114 or R236FA	010	0100

Recommended Sampling Locations for REFR SYSTEMS

SAMM	Name	Sampling Locations
01	NO. 3 AC PLANT	1. Test Connections 2. Hot Gas Bypass Valve 3. Below PPO Unit 4. Charging Valve
02	NO. 4 AC PLANT	1. Test Connections 2. Hot Gas Bypass Valve 3. Below PPO Unit 4. Charging Valve
03	NO. 5 AC PLANT	1. Test Connections 2. Hot Gas Bypass Valve 3. Below PPO Unit 4. Charging Valve
04	REMOTE RECEIVERS	1. Receiver No. 5 2. Receivers No. 3 & 4

M-3. REFR PLANTS NO. 1, 2, & 3

RELAY DETAILS

Parameter	Relay 1	Relay 2	Relay 3	Relay 4
Operation	Continuous	Continuous	Continuous	Continuous
Mode	System	System	System	System
Logic	Any One	Any One	Any One	Any One
Pulse (m)	03	03	03	03
Inhibit (h)	00	00	00	00
Day Time (h)	06	06	06	06
Day Factor	2.8	2.8	2.8	2.8
Night Time (h)	18	18	18	18
Night Factor	2.8	2.8	2.8	2.8
SAMM 01	X	X	X	X
SAMM 02	X	X	X	X
SAMM 03	X	X	X	X
SAMM 04	NOT USED			

SAMM DETAILS

Address	Name	Alert	Alarm	Critical	Refrigerant	Cycle Time (mins)	Pipe Length (ft)
01	NO. 1 REFR PLANT	0050	0300	0850	R12 or R134A	010	0100
02	NO. 2 REFR PLANT	0050	0300	0850	R12 or R134A	010	0100
03	NO. 3 REFR PLANT	0050	0300	0850	R12 or R134A	010	0100
04	NOT USED						

Recommended Sampling Locations for REFR PLANTS NO. 1, 2, & 3

SAMM	Name	Sampling Locations
01	NO. 1 REFR PLANT	1. Shaft Seal 2. Gageboard 3. Dehydrator 4. Condenser Purge Valve
02	NO. 2 REFR PLANT	1. Shaft Seal 2. Gageboard 3. Dehydrator 4. Condenser Purge Valve
03	NO. 3 REFR PLANT	1. Shaft Seal 2. Gageboard 3. Dehydrator 4. Condenser Purge Valve
04	NOT USED	

M-4. REFR SPACES

RELAY DETAILS

Parameter	Relay 1	Relay 2	Relay 3	Relay 4
Operation	Continuous	Continuous	Continuous	Continuous
Mode	System	Group	System	System
Logic	Any One	Any One	Any One	Any One
Pulse (m)	03	03	03	03
Inhibit (h)	00	00	00	00
Day Time (h)	06	06	06	06
Day Factor	2.8	2.8	2.8	2.8
Night Time (h)	18	18	18	18
Night Factor	2.8	2.8	2.8	2.8
SAMM 01	X		X	X
SAMM 02	X		X	X
SAMM 03	X		X	X
SAMM 04	X		X	X
SAMM 05	X		X	X
SAMM 06	X	X	X	X
SAMM 07	X		X	X
SAMM 08	NOT USED			

SAMM DETAILS

Address	Name	Alert	Alarm	Critical	Refrigerant	Cycle Time (mins)	Pipe Length (ft)
01	FREEZE STRM	0050	0300	0850	R12 or R134A	010	0100
02	NO. 1 CHILL STRM	0050	0300	0850	R12 or R134A	010	0100
03	PASSAGEWAY (1-43-1-A)	0050	0300	0850	R12 or R134A	010	0100
04	NO. 2 CHILL STRM	0050	0300	0850	R12 or R134A	010	0100
05	BATT STRM	0050	0300	0850	R134A	010	0100
06	THAW STRM	0050	0300	0850	R12 or R134A	010	0100
07	PASSAGEWAY (1-49-0-A)	0050	0300	0850	R12 or R134A	010	0100
08	NOT USED						

Recommended Sampling Locations for REFR SPACES

SAMM	Name	Sampling Locations
01	FREEZE STRM	1. Ovhd Center 2. 9” Above Deck Near Door
02	NO. 1 CHILL STRM	1. Ovhd Center 2. 9” Above Deck Near Door
03	PASSAGEWAY (1-43-1-A)	1. TXV Area (Fwd Cage) 2. Service Valves 3. TXV Area (Aft Cage) 4. Service Valves
04	NO. 2 CHILL STRM	1. Ovhd Center 2. 9” Above Deck Near Door
05	BATT STRM	1. Ovhd Center 2. 9” Above Deck Near Door
06	THAW STRM	1. Ovhd Center 2. 9” Above Deck Near Door
07	PASSAGEWAY (1-49-0-A)	1. TXV Area 2. Service Valves
08	NOT USED	

APPENDIX N

(LHD 1 CLASS)

N-1. AC PLANTS NO. 1 & 2

RELAY DETAILS

Parameter	Relay 1	Relay 2	Relay 3	Relay 4
Operation	Continuous	Continuous	Continuous	Continuous
Mode	System	System	System	System
Logic	Any One	Any One	Any One	Any One
Pulse (m)	03	03	03	03
Inhibit (h)	00	00	00	00
Day Time (h)	06	06	06	06
Day Factor	2.8	2.8	2.8	2.8
Night Time (h)	18	18	18	18
Night Factor	2.8	2.8	2.8	2.8
SAMM 01	X	X	X	X
SAMM 02	X	X	X	X
SAMM 03	X	X	X	X
SAMM 04	X	X	X	X

SAMM DETAILS

Address	Name	Alert	Alarm	Critical	Refrigerant	Cycle Time (mins)	Pipe Length (ft)
01	NO. 1 AC PLANT FRONT	0050	0300	0850	R114 or R236FA	010	0100
02	NO. 1 AC PLANT BACK	0050	0300	0850	R114 or R236FA	010	0100
03	NO. 2 AC PLANT FRONT	0050	0300	0850	R114 or R236FA	010	0100
04	NO. 2 AC PLANT BACK	0050	0300	0850	R114 or R236FA	010	0100

Recommended Sampling Locations for AC PLANTS NO. 1 & 2

SAMM	Name	Sampling Locations
01	NO. 1 AC PLANT FRONT	1. Test Connections/Gageboard 2. Below Oil Filters 3. Compressor 4. CWCV
02	NO. 1 AC PLANT BACK	1. Below PPO Unit 2. Hot Gas Bypass Valve No. 1 3. Hot Gas Bypass Valve No. 2 4. Chiller Low
03	NO. 2 AC PLANT FRONT	1. Test Connections/Gageboard 2. Below Oil Filters 3. Compressor 4. CWCV
04	NO. 2 AC PLANT BACK	1. Below PPO Unit 2. Hot Gas Bypass Valve No. 1 3. Hot Gas Bypass Valve No. 2 4. Chiller Low

N-2. AC PLANTS NO. 3 & 4

RELAY DETAILS

Parameter	Relay 1	Relay 2	Relay 3	Relay 4
Operation	Continuous	Continuous	Continuous	Continuous
Mode	System	System	System	System
Logic	Any One	Any One	Any One	Any One
Pulse (m)	03	03	03	03
Inhibit (h)	00	00	00	00
Day Time (h)	06	06	06	06
Day Factor	2.8	2.8	2.8	2.8
Night Time (h)	18	18	18	18
Night Factor	2.8	2.8	2.8	2.8
SAMM 01	X	X	X	X
SAMM 02	X	X	X	X
SAMM 03	X	X	X	X
SAMM 04	X	X	X	X

SAMM DETAILS

Address	Name	Alert	Alarm	Critical	Refrigerant	Cycle Time (mins)	Pipe Length (ft)
01	NO. 3 AC PLANT FRONT	0050	0300	0850	R114 or R236FA	010	0100
02	NO. 3 AC PLANT BACK	0050	0300	0850	R114 or R236FA	010	0100
03	NO. 4 AC PLANT FRONT	0050	0300	0850	R114 or R236FA	010	0100
04	NO. 4 AC PLANT BACK	0050	0300	0850	R114 or R236FA	010	0100

Recommended Sampling Locations for AC PLANTS NO. 3 & 4

SAMM	Name	Sampling Locations
01	NO. 3 AC PLANT FRONT	1. Test Connections/Gageboard 2. Below Oil Filters 3. Compressor 4. CWCV
02	NO. 3 AC PLANT BACK	1. Below PPO Unit 2. Hot Gas Bypass Valve No. 1 3. Hot Gas Bypass Valve No. 2 4. Chiller Low
03	NO. 4 AC PLANT FRONT	1. Test Connections/Gageboard 2. Below Oil Filters 3. Compressor 4. CWCV
04	NO. 4 AC PLANT BACK	1. Below PPO Unit 2. Hot Gas Bypass Valve No. 1 3. Hot Gas Bypass Valve No. 2 4. Chiller Low

N-3. AC PLANTS NO. 5 & 6

RELAY DETAILS

Parameter	Relay 1	Relay 2	Relay 3	Relay 4
Operation	Continuous	Continuous	Continuous	Continuous
Mode	System	System	System	System
Logic	Any One	Any One	Any One	Any One
Pulse (m)	03	03	03	03
Inhibit (h)	00	00	00	00
Day Time (h)	06	06	06	06
Day Factor	2.8	2.8	2.8	2.8
Night Time (h)	18	18	18	18
Night Factor	2.8	2.8	2.8	2.8
SAMM 01	X	X	X	X
SAMM 02	X	X	X	X
SAMM 03	X	X	X	X
SAMM 04	X	X	X	X

SAMM DETAILS

Address	Name	Alert	Alarm	Critical	Refrigerant	Cycle Time (mins)	Pipe Length (ft)
01	NO. 5 AC PLANT FRONT	0050	0300	0850	R114 or R236FA	010	0100
02	NO. 5 AC PLANT BACK	0050	0300	0850	R114 or R236FA	010	0100
03	NO. 6 AC PLANT FRONT	0050	0300	0850	R114 or R236FA	010	0100
04	NO. 6 AC PLANT BACK	0050	0300	0850	R114 or R236FA	010	0100

Recommended Sampling Locations for AC PLANTS NO. 5 & 6

SAMM	Name	Sampling Locations
01	NO. 5 AC PLANT FRONT	1. Test Connections/Gageboard 2. Below Oil Filters 3. Compressor 4. CWCV
02	NO. 5 AC PLANT BACK	1. Below PPO Unit 2. Hot Gas Bypass Valve No. 1 3. Hot Gas Bypass Valve No. 2 4. Chiller Low
03	NO. 6 AC PLANT FRONT	1. Test Connections/Gageboard 2. Below Oil Filters 3. Compressor 4. CWCV
04	NO. 6 AC PLANT BACK	1. Below PPO Unit 2. Hot Gas Bypass Valve No. 1 3. Hot Gas Bypass Valve No. 2 4. Chiller Low

N-4. REFR PLANTS NO. 1, 2, & 3

RELAY DETAILS

Parameter	Relay 1	Relay 2	Relay 3	Relay 4
Operation	Continuous	Continuous	Continuous	Continuous
Mode	System	System	System	System
Logic	Any One	Any One	Any One	Any One
Pulse (m)	03	03	03	03
Inhibit (h)	00	00	00	00
Day Time (h)	06	06	06	06
Day Factor	2.8	2.8	2.8	2.8
Night Time (h)	18	18	18	18
Night Factor	2.8	2.8	2.8	2.8
SAMM 01	X	X	X	X
SAMM 02	X	X	X	X
SAMM 03	X	X	X	X
SAMM 04	X	X	X	X

SAMM DETAILS

Address	Name	Alert	Alarm	Critical	Refrigerant	Cycle Time (mins)	Pipe Length (ft)
01	NO. 1 REFR PLANT	0050	0300	0850	R12 or R134A	010	0100
02	NO. 2 REFR PLANT	0050	0300	0850	R12 or R134A	010	0100
03	NO. 3 REFR PLANT	0050	0300	0850	R12 or R134A	010	0100
04	GAGEBOARDS AND TEST CONNECTIONS	0050	0300	0850	R12 or R134A	010	0100

Recommended Sampling Locations for REFR PLANTS NO. 1, 2, & 3

SAMM	Name	Sampling Locations
01	NO. 1 REFR PLANT	1. Below Shaft Seal 2. Below Suction Strainer 3. Dehydrator/Refr Charging Valve 4. CWCV/Condenser Purge Valve
02	NO. 2 REFR PLANT	1. Below Shaft Seal 2. Below Suction Strainer 3. Dehydrator/Refr Charging Valve 4. CWCV/Condenser Purge Valve
03	NO. 3 REFR PLANT	1. Below Shaft Seal 2. Below Suction Strainer 3. Dehydrator/Refr Charging Valve 4. CWCV/Condenser Purge Valve
04	GAGEBOARDS AND TEST CONNECTIONS	1. No. 1 Gageboard 2. No. 2 Gageboard 3. No. 3 Gageboard

N-5. THAW ROOM

RELAY DETAILS

Parameter	Relay 1	Relay 2	Relay 3	Relay 4
Operation	Continuous	Continuous	Continuous	Continuous
Mode	System	System	System	System
Logic	Any One	Any One	Any One	Any One
Pulse (m)	03	03	03	03
Inhibit (h)	00	00	00	00
Day Time (h)	06	06	06	06
Day Factor	2.8	2.8	2.8	2.8
Night Time (h)	18	18	18	18
Night Factor	2.8	2.8	2.8	2.8
SAMM 01	X	X	X	X
SAMM 02	X	X	X	X
SAMM 03	NOT USED			
SAMM 04	NOT USED			

SAMM DETAILS

Address	Name	Alert	Alarm	Critical	Refrigerant	Cycle Time (mins)	Pipe Length (ft)
01	THAW ROOM (1-49-1-A)	0050	0300	0850	R12 or R134A	010	0100
02	PASSAGEWAY (1-41-02-L)	0050	0300	0850	R12 or R134A	010	0100
03	NOT USED						
04	NOT USED						

Recommended Sampling Locations for THAW ROOM

SAMM	Name	Sampling Locations
01	THAW ROOM (1-49-1-A)	1. Ovhd Center
02	PASSAGEWAY (1-41-02-L)	1. TXV Area 2. TXV Area
03	NOT USED	
04	NOT USED	

N-6. REFR STRMS DECK 4

RELAY DETAILS

Parameter	Relay 1	Relay 2	Relay 3	Relay 4
Operation	Continuous	Continuous	Continuous	Continuous
Mode	System	System	System	System
Logic	Any One	Any One	Any One	Any One
Pulse (m)	03	03	03	03
Inhibit (h)	00	00	00	00
Day Time (h)	06	06	06	06
Day Factor	2.8	2.8	2.8	2.8
Night Time (h)	18	18	18	18
Night Factor	2.8	2.8	2.8	2.8
SAMM 01	X	X	X	X
SAMM 02	X	X	X	X
SAMM 03	X	X	X	X
SAMM 04	NOT USED			

SAMM DETAILS

Address	Name	Alert	Alarm	Critical	Refrigerant	Cycle Time (mins)	Pipe Length (ft)
01	SD STRM (4-47-2-A)	0050	0300	0850	R12 or R134A	010	0100
02	TXV AREA (4-46-2-L)	0050	0300	0850	R12 or R134A	010	0100
03	CHILLED STRM NO. 2	0050	0300	0850	R12 or R134A	010	0100
04	NOT USED						

Recommended Sampling Locations for REFR STRMS DECK 4

SAMM	Name	Sampling Locations
01	SD STRM (4-47-2-A)	1. 9” Above Deck Near Door
02	TXV AREA (4-46-2-L)	1. TXV Area 2. TXV Area
03	CHILLED STRM NO. 2	1. 9” Above Deck Near Port Door 2. 9” Above Deck Near Stbd Door
04	NOT USED	

N-7. REFR STRMS DECK 5

RELAY DETAILS

Parameter	Relay 1	Relay 2	Relay 3	Relay 4
Operation	Continuous	Continuous	Continuous	Continuous
Mode	System	System	System	System
Logic	Any One	Any One	Any One	Any One
Pulse (m)	03	03	03	03
Inhibit (h)	00	00	00	00
Day Time (h)	06	06	06	06
Day Factor	2.8	2.8	2.8	2.8
Night Time (h)	18	18	18	18
Night Factor	2.8	2.8	2.8	2.8
SAMM 01	X	X	X	X
SAMM 02	X	X	X	X
SAMM 03	X	X	X	X
SAMM 04	NOT USED			

SAMM DETAILS

Address	Name	Alert	Alarm	Critical	Refrigerant	Cycle Time (mins)	Pipe Length (ft)
01	VESTIBULE (5-47-1-L)	0050	0300	0850	R12 or R134A	010	0100
02	FREEZE STRM (5-41-0-A)	0050	0300	0850	R12 or R134A	010	0100
03	CHILLED STRM NO. 1	0050	0300	0850	R12 or R134A	010	0100
04	NOT USED						

Recommended Sampling Locations for REFR STRMS DECK 5

SAMM	Name	Sampling Locations
01	VESTIBULE (5-47-1-L)	1. TXV Area 2. TXV Area
02	FREEZE STRM (5-41-0-A)	1. 9” Above Deck Near Port Door 2. Ovhd Center 3. 9” Above Deck Near Stbd Door
03	CHILLED STRM NO. 1	1. 9” Above Deck Near Port Door 2. 9” Above Deck Near Stbd Door
04	NOT USED	

APPENDIX O

(LPD 4 CLASS)

O-1. AC PLANTS NO. 1 & 2

RELAY DETAILS

Parameter	Relay 1	Relay 2	Relay 3	Relay 4
Operation	Continuous	Continuous	Continuous	Continuous
Mode	System	System	System	System
Logic	Any One	Any One	Any One	Any One
Pulse (m)	03	03	03	03
Inhibit (h)	00	00	00	00
Day Time (h)	06	06	06	06
Day Factor	2.8	2.8	2.8	2.8
Night Time (h)	18	18	18	18
Night Factor	2.8	2.8	2.8	2.8
SAMM 01	X	X	X	X
SAMM 02	X	X	X	X
SAMM 03	X	X	X	X
SAMM 04	X	X	X	X

SAMM DETAILS

Address	Name	Alert	Alarm	Critical	Refrigerant	Cycle Time (mins)	Pipe Length (ft)
01	NO. 1 AC COMPRESSOR	0050	0300	0850	R134A	010	0100
02	NO. 1 AC COND/CHILLER	0050	0300	0850	R134A	010	0100
03	NO. 2 AC COMPRESSOR	0050	0300	0850	R134A	010	0100
04	NO. 2 AC COND/CHILLER	0050	0300	0850	R134A	010	0100

Recommended Sampling Locations for AC PLANTS NO. 1 & 2

SAMM	Name	Sampling Locations
01	NO. 1 AC COMPRESSOR	1. Inside Controller at Test Connections 2. Shaft Seal 3. Compressor Discharge Valves 4. Compressor Bearing End Connections
02	NO. 1 AC COND/CHILLER	1. Receiver Inlet/Outlet Valves 2. TXV Area 3. Chiller on Charging Valve Side 4. Condenser Purge Valve Area
03	NO. 2 AC COMPRESSOR	1. Inside Controller at Test Connections 2. Shaft Seal 3. Compressor Discharge Valves 4. Compressor Bearing End Connections
04	NO. 2 AC COND/CHILLER	1. Receiver Inlet/Outlet Valves 2. TXV Area 3. Chiller on Charging Valve Side 4. Condenser Purge Valve Area

O-2. AC PLANTS NO. 3 & 4

RELAY DETAILS

Parameter	Relay 1	Relay 2	Relay 3	Relay 4
Operation	Continuous	Continuous	Continuous	Continuous
Mode	System	System	System	System
Logic	Any One	Any One	Any One	Any One
Pulse (m)	03	03	03	03
Inhibit (h)	00	00	00	00
Day Time (h)	06	06	06	06
Day Factor	2.8	2.8	2.8	2.8
Night Time (h)	18	18	18	18
Night Factor	2.8	2.8	2.8	2.8
SAMM 01	X	X	X	X
SAMM 02	X	X	X	X
SAMM 03	X	X	X	X
SAMM 04	X	X	X	X

SAMM DETAILS

Address	Name	Alert	Alarm	Critical	Refrigerant	Cycle Time (mins)	Pipe Length (ft)
01	NO. 3 AC COMPRESSOR	0050	0300	0850	R134A	010	0100
02	NO. 3 AC COND/CHILLER	0050	0300	0850	R134A	010	0100
03	NO. 4 AC COMPRESSOR	0050	0300	0850	R134A	010	0100
04	NO. 4 AC COND/CHILLER	0050	0300	0850	R134A	010	0100

Recommended Sampling Locations for AC PLANTS NO. 3 & 4

SAMM	Name	Sampling Locations
01	NO. 3 AC COMPRESSOR	1. Inside Controller at Test Connections 2. Shaft Seal 3. Compressor Discharge Valves 4. Compressor Bearing End Connections
02	NO. 3 AC COND/CHILLER	1. Receiver Inlet/Outlet Valves 2. TXV Area 3. Chiller on Charging Valve Side 4. Condenser Purge Valve Area
03	NO. 4 AC COMPRESSOR	1. Inside Controller at Test Connections 2. Shaft Seal 3. Compressor Discharge Valves 4. Compressor Bearing End Connections
04	NO. 4 AC COND/CHILLER	1. Receiver Inlet/Outlet Valves 2. TXV Area 3. Chiller on Charging Valve Side 4. Condenser Purge Valve Area

O-3. REFR PLANTS NO. 1 & 2

RELAY DETAILS

Parameter	Relay 1	Relay 2	Relay 3	Relay 4
Operation	Continuous	Continuous	Continuous	Continuous
Mode	System	System	System	System
Logic	Any One	Any One	Any One	Any One
Pulse (m)	03	03	03	03
Inhibit (h)	00	00	00	00
Day Time (h)	06	06	06	06
Day Factor	2.8	2.8	2.8	2.8
Night Time (h)	18	18	18	18
Night Factor	2.8	2.8	2.8	2.8
SAMM 01	X	X	X	X
SAMM 02	X	X	X	X
SAMM 03	X	X	X	X
SAMM 04	X	X	X	X

SAMM DETAILS

Address	Name	Alert	Alarm	Critical	Refrigerant	Cycle Time (mins)	Pipe Length (ft)
01	NO. 1 REFR COMPRESSOR	0050	0300	0850	R134A	010	0100
02	NO. 1 REFR CONDENSING UNIT	0050	0300	0850	R134A	010	0100
03	NO. 2 REFR COMPRESSOR	0050	0300	0850	R134A	010	0100
04	NO. 2 REFR CONDENSING UNIT	0050	0300	0850	R134A	010	0100

Recommended Sampling Locations for REFR PLANTS NO. 1 & 2

SAMM	Name	Sampling Locations
01	NO. 1 REFR COMPRESSOR	1. Shaft Seal 2. Service Valves 3. Oil Cooler Manifold
02	NO. 1 REFR CONDENSING UNIT	1. Receiver/Dehydrator Area 2. Condenser Purge Valve 3. WRV
03	NO. 2 REFR COMPRESSOR	1. Shaft Seal 2. Service Valves 3. Oil Cooler Manifold
04	NO. 2 REFR CONDENSING UNIT	1. Receiver/Dehydrator Area 2. Condenser Purge Valve 3. WRV

O-4. REFR SPACES

RELAY DETAILS

Parameter	Relay 1	Relay 2	Relay 3	Relay 4
Operation	Continuous	Continuous	Continuous	Continuous
Mode	System	System	System	System
Logic	Any One	Any One	Any One	Any One
Pulse (m)	03	03	03	03
Inhibit (h)	00	00	00	00
Day Time (h)	06	06	06	06
Day Factor	2.8	2.8	2.8	2.8
Night Time (h)	18	18	18	18
Night Factor	2.8	2.8	2.8	2.8
SAMM 01	X	X	X	X
SAMM 02	X	X	X	X
SAMM 03	X	X	X	X
SAMM 04	X	X	X	X
SAMM 05	X	X	X	X
SAMM 06	X	X	X	X
SAMM 07	NOT USED			
SAMM 08	NOT USED			

SAMM DETAILS

Address	Name	Alert	Alarm	Critical	Refrigerant	Cycle Time (mins)	Pipe Length (ft)
01	SMALL FREEZER (4-60-0-A)	0050	0300	0850	R134A	010	0100
02	CHILL STRM (4-52-0-A)	0050	0300	0850	R134A	010	0100
03	PASSAGEWAY (4-60-1-L)	0050	0300	0850	R134A	010	0100
04	FREEZER (5-52-0-A)	0050	0300	0850	R134A	010	0100
05	WARDROOM FREEZER (5-52-1-A)	0050	0300	0850	R134A	010	0100
06	PASSAGEWAY (5-60-1-L)	0050	0300	0850	R134A	010	0100
07	NOT USED						
08	NOT USED						

Recommended Sampling Locations for REFR SPACES

SAMM	Name	Sampling Locations
01	SMALL FREEZER (4-60-0-A)	1. Ovhd Center 2. 9” Above Deck Near Door
02	CHILL STRM (4-52-0-A)	1. Ovhd Center Fwd 2. 9” Above Deck Near Door 3. Ovhd Center Aft
03	PASSAGEWAY (4-60-1-L)	1. TXV Area Fwd 2. Service Valves 3. TXV Area Aft
04	FREEZER (5-52-1-A)	1. Ovhd Center 2. 9” Above Deck Near Door
05	WARDROOM FREEZER (5-52-1-A)	1. Ovhd Center Fwd 2. 9” Above Deck Near Door 3. Ovhd Center Fwd
06	PASSAGEWAY (5-60-1-L)	1. TXV Area Fwd 2. Service Valves3. TXV Area Aft
07	NOT USED	
08	NOT USED	

APPENDIX P

(LSD)

SECTION P1

(LSD 36 CLASS)

P1-1. AC PLANTS NO. 1 & 2

RELAY DETAILS

Parameter	Relay 1	Relay 2	Relay 3	Relay 4
Operation	Continuous	Continuous	Continuous	Continuous
Mode	System	System	System	System
Logic	Any One	Any One	Any One	Any One
Pulse (m)	03	03	03	03
Inhibit (h)	00	00	00	00
Day Time (h)	06	06	06	06
Day Factor	2.8	2.8	2.8	2.8
Night Time (h)	18	18	18	18
Night Factor	2.8	2.8	2.8	2.8
SAMM 01	X	X	X	X
SAMM 02	X	X	X	X
SAMM 03	X	X	X	X
SAMM 04	NOT USED			

SAMM DETAILS

Address	Name	Alert	Alarm	Critical	Refrigerant	Cycle Time (mins)	Pipe Length (ft)
01	NO. 1 AC PLANT	0050	0300	0850	R134A	010	0100
02	NO. 2 AC PLANT	0050	0300	0850	R134A	010	0100
03	GAGEBOARD/CHARGING CONNECTIONS	0050	0300	0850	R134A	010	0100
04	NOT USED						

Recommended Sampling Locations for AC PLANTS NO. 1 & 2

SAMM	Name	Sampling Locations
01	NO. 1 AC PLANT	1. Dehydrator/Receiver Drain 2. Condenser Purge Valve 3. Shaft Seal 4. WRV
02	NO. 2 AC PLANT	1. Dehydrator/Receiver Drain 2. Condenser Purge Valve 3. Shaft Seal 4. WRV
03	GAGEBOARD/CHARGING CONNECTIONS	1. No. 1 AC Plant Gageboard 2. No. 2 AC Plant Gageboard 3. No. 1 AC Plant Charging Connection 4. No. 2 AC Plant Charging Connection
04	NOT USED	

P1-2. AC PLANTS NO. 3 & 4

RELAY DETAILS

Parameter	Relay 1	Relay 2	Relay 3	Relay 4
Operation	Continuous	Continuous	Continuous	Continuous
Mode	System	System	System	System
Logic	Any One	Any One	Any One	Any One
Pulse (m)	03	03	03	03
Inhibit (h)	00	00	00	00
Day Time (h)	06	06	06	06
Day Factor	2.8	2.8	2.8	2.8
Night Time (h)	18	18	18	18
Night Factor	2.8	2.8	2.8	2.8
SAMM 01	X	X	X	X
SAMM 02	X	X	X	X
SAMM 03	X	X	X	X
SAMM 04	NOT USED			

SAMM DETAILS

Address	Name	Alert	Alarm	Critical	Refrigerant	Cycle Time (mins)	Pipe Length (ft)
01	NO. 3 AC PLANT	0050	0300	0850	R134A	010	0100
02	NO. 4 AC PLANT	0050	0300	0850	R134A	010	0100
03	GAGEBOARD/CHARGING CONNECTIONS	0050	0300	0850	R134A	010	0100
04	NOT USED						

Recommended Sampling Locations for AC PLANTS NO. 3 & 4

SAMM	Name	Sampling Locations
01	NO. 3 AC PLANT	1. Dehydrator/Receiver Drain 2. Condenser Purge Valve 3. Shaft Seal 4. WRV
02	NO. 4 AC PLANT	1. Dehydrator/Receiver Drain 2. Condenser Purge Valve 3. Shaft Seal 4. WRV
03	GAGEBOARD/CHARGING CONNECTIONS	1. No. 3 AC Plant Gageboard 2. No. 4 AC Plant Gageboard 3. No. 3 AC Plant Charging Connection 4. No. 4 AC Plant Charging Connection
04	NOT USED	

P1-3. REFR PLANTS AND FREEZE STRMS

RELAY DETAILS

Parameter	Relay 1	Relay 2	Relay 3	Relay 4
Operation	Continuous	Continuous	Continuous	Continuous
Mode	System	Group	Group	System
Logic	Any One	Any One	Any One	Any One
Pulse (m)	03	03	03	03
Inhibit (h)	00	00	00	00
Day Time (h)	06	06	06	06
Day Factor	2.8	2.8	2.8	2.8
Night Time (h)	18	18	18	18
Night Factor	2.8	2.8	2.8	2.8
SAMM 01	X			X
SAMM 02	X			X
SAMM 03	X		X	X
SAMM 04	X	X		X

SAMM DETAILS

Address	Name	Alert	Alarm	Critical	Refrigerant	Cycle Time (mins)	Pipe Length (ft)
01	NO. 1 REFR PLANT	0050	0300	0850	R134A	010	0100
02	NO. 2 REFR PLANT	0050	0300	0850	R134A	010	0100
03	FREEZE STRM NO. 1	0050	0300	0850	R134A	010	0100
04	FREEZE STRM NO. 2	0050	0300	0850	R134A	010	0100

Recommended Sampling Locations for REFR PLANTS AND FREEZE STRMS

SAMM	Name	Sampling Locations
01	NO. 1 REFR PLANT	1. Shaft Seal 2. Dehydrator and C/D Connection 3. Condenser Purge Valve 4. WRV
02	NO. 2 REFR PLANT	1. Shaft Seal 2. Dehydrator and C/D Connection 3. Condenser Purge Valve 4. WRV
03	FREEZE STRM NO. 1	1. TXV/Strainer Area (Can Cover) 2. TXV/Strainer/Service Valves 3. Ovhd 4. 9” Above Deck Near Door
04	FREEZE STRM NO. 2	1. TXV/Strainer Area (Can Cover) 2. TXV/Strainer/Service Valves 3. Ovhd 4. 9” Above Deck Near Door

P1-4. REFR SPACES

RELAY DETAILS

Parameter	Relay 1	Relay 2	Relay 3	Relay 4
Operation	Continuous	Continuous	Continuous	Continuous
Mode	System	Group	System	System
Logic	Any One	Any One	Any One	Any One
Pulse (m)	03	03	03	03
Inhibit (h)	00	00	00	00
Day Time (h)	06	06	06	06
Day Factor	2.8	2.8	2.8	2.8
Night Time (h)	18	18	18	18
Night Factor	2.8	2.8	2.8	2.8
SAMM 01	X		X	X
SAMM 02	X		X	X
SAMM 03	X		X	X
SAMM 04	X	X	X	X

SAMM DETAILS

Address	Name	Alert	Alarm	Critical	Refrigerant	Cycle Time (mins)	Pipe Length (ft)
01	CHILL STRM NO. 1 VESTIBULE CONTROLS	0050	0300	0850	R134A	010	0100
02	CHILL STRM NO. 1 PASSAGEWAY CONTROLS	0050	0300	0850	R134A	010	0100
03	CHILL STRM NO. 2 CONTROLS	0050	0300	0850	R134A	010	0100
04	CHILL STRM NO. 2	0050	0300	0850	R134A	010	0100

Recommended Sampling Locations for REFR SPACES

SAMM	Name	Sampling Locations
01	CHILL STRM NO. 1 VESTIBULE CONTROLS	1. TXV/Strainer Area in Vestibule
02	CHILL STRM NO. 1 PASSAGEWAY CONTROLS	1. TXV/Strainer Area in Passageway 2. Ovhd Fwd 3. Ovhd Aft 4. 9” Above Deck Near Door
03	CHILL STRM NO. 2 CONTROLS	1. TXV/Strainer Area Fwd 2. TXV/Strainer Area Aft
04	CHILL STRM NO. 2	1. Ovhd Fwd 2. Ovhd Aft 3. 9” Above Deck Near Door

SECTION P2

(LSD 41-43)

P2-1. AC PLANTS NO. 1, 2, & 3, AND REFR PLANTS NO. 1 & 2

RELAY DETAILS

Parameter	Relay 1	Relay 2	Relay 3	Relay 4
Operation	Continuous	Continuous	Continuous	Continuous
Mode	System	System	System	System
Logic	Any One	Any One	Any One	Any One
Pulse (m)	03	03	03	03
Inhibit (h)	00	00	00	00
Day Time (h)	06	06	06	06
Day Factor	2.8	2.8	2.8	2.8
Night Time (h)	18	18	18	18
Night Factor	2.8	2.8	2.8	2.8
SAMM 01	X	X	X	X
SAMM 02	X	X	X	X
SAMM 03	X	X	X	X
SAMM 04	X	X	X	X
SAMM 05	X	X	X	X
SAMM 06	X	X	X	X
SAMM 07	X	X	X	X
SAMM 08	X	X	X	X

SAMM DETAILS

Address	Name	Alert	Alarm	Critical	Refrigerant	Cycle Time (mins)	Pipe Length (ft)
01	NO. 1 REFR PLANT	0050	0300	0850	R134A	010	0100
02	NO. 2 REFR PLANT	0050	0300	0850	R134A	010	0100
03	NO. 1 AC COMPRESSOR	0050	0300	0850	R134A	010	0100
04	NO. 1 AC PLANT CONDENSER	0050	0300	0850	R134A	010	0100
05	NO. 2 AC PLANT COMPRESSOR	0050	0300	0850	R134A	010	0100
06	NO. 2 AC PLANT CONDENSER	0050	0300	0850	R134A	010	0100
07	NO. 3 AC PLANT COMPRESSOR	0050	0300	0850	R134A	010	0100
08	NO. 3 AC PLANT CONDENSER	0050	0300	0850	R134A	010	0100

Recommended Sampling Locations for AC PLANTS NO. 1, 2, & 3, AND REFR PLANTS NO. 1 & 2

SAMM	Name	Sampling Locations
01	NO. 1 REFR PLANT	1. CWCV/Condenser Area 2. Below Compressor Shaft Seal 3. Gageboard Test Connections 4. Oil Cooler Manifold
02	NO. 2 REFR PLANT	1. CWCV/Condenser Area 2. Below Compressor Shaft Seal 3. Gageboard Test Connections 4. Oil Cooler Manifold
03	NO. 1 AC PLANT COMPRESSOR	1. Compressor Pump End 2. Compressor Seal End 3. Compressor Unloader Solenoid 4. Gageboard Test Connections
04	NO. 1 AC PLANT CONDENSER	1. Dehydrator/Charging Valve 2. TXV 3. King Solenoid Valve 4. Below Chiller Centerline
05	NO. 2 AC PLANT COMPRESSOR	1. Compressor Pump End 2. Compressor Seal End 3. Compressor Unloader Solenoid 4. Gageboard Test Connections
06	NO. 2 AC PLANT CONDENSER	1. Dehydrator/Charging Valve 2. TXV 3. King Solenoid Valve 4. Below Chiller Centerline
07	NO. 3 AC PLANT COMPRESSOR	1. Compressor Pump End 2. Compressor Seal End 3. Compressor Unloader Solenoid 4. Gageboard Test Connections
08	NO. 3 AC PLANT CONDENSER	1. Dehydrator/Charging Valve 2. TXV 3. King Solenoid Valve 4. Below Chiller Centerline

P2-2. AC PLANTS NO. 4 & 5

RELAY DETAILS

Parameter	Relay 1	Relay 2	Relay 3	Relay 4
Operation	Continuous	Continuous	Continuous	Continuous
Mode	System	System	System	System
Logic	Any One	Any One	Any One	Any One
Pulse (m)	03	03	03	03
Inhibit (h)	00	00	00	00
Day Time (h)	06	06	06	06
Day Factor	2.8	2.8	2.8	2.8
Night Time (h)	18	18	18	18
Night Factor	2.8	2.8	2.8	2.8
SAMM 01	X	X	X	X
SAMM 02	X	X	X	X
SAMM 03	X	X	X	X
SAMM 04	X	X	X	X

SAMM DETAILS

Address	Name	Alert	Alarm	Critical	Refrigerant	Cycle Time (mins)	Pipe Length (ft)
01	NO. 4 AC PLANT COMPRESSOR	0050	0300	0850	R134A	010	0100
02	NO. 4 AC PLANT CONDENSER	0050	0300	0850	R134A	010	0100
03	NO. 5 AC PLANT COMPRESSOR	0050	0300	0850	R134A	010	0100
04	NO. 5 AC PLANT CONDENSER	0050	0300	0850	R134A	010	0100

Recommended Sampling Locations for AC PLANTS NO. 4 & 5

SAMM	Name	Sampling Locations
01	NO. 4 AC PLANT COMPRESSOR	1. Compressor Pump End 2. Compressor Seal End 3. Compressor Unloader Solenoid 4. Gageboard Test Connections
02	NO. 4 AC PLANT CONDENSER	1. Dehydrator/Charging Valve 2. TXV 3. King Solenoid Valve 4. Below Chiller Centerline
03	NO. 5 AC PLANT COMPRESSOR	1. Compressor Pump End 2. Compressor Seal End 3. Compressor Unloader Solenoid 4. Gageboard Test Connections
04	NO. 5 AC PLANT CONDENSER	1. Dehydrator/Charging Valve 2. TXV 3. King Solenoid Valve 4. Below Chiller Centerline

P2-3. CHILL STRM AND FREEZE STRM NO. 1

RELAY DETAILS

Parameter	Relay 1	Relay 2	Relay 3	Relay 4
Operation	Continuous	Continuous	Continuous	Continuous
Mode	System	System	System	System
Logic	Any One	Any One	Any One	Any One
Pulse (m)	03	03	03	03
Inhibit (h)	00	00	00	00
Day Time (h)	06	06	06	06
Day Factor	2.8	2.8	2.8	2.8
Night Time (h)	18	18	18	18
Night Factor	2.8	2.8	2.8	2.8
SAMM 01	X	X	X	X
SAMM 02	X	X	X	X
SAMM 03	X	X	X	X
SAMM 04	X	X	X	X

SAMM DETAILS

Address	Name	Alert	Alarm	Critical	Refrigerant	Cycle Time (mins)	Pipe Length (ft)
01	CHILL STRM (2-23-2-A)	0050	0300	0850	R134A	010	0100
02	CHILL STRM CONTROLS	0050	0300	0850	R134A	010	0100
03	FREEZE STRM NO. 1 (2-23-1-A)	0050	0300	0850	R134A	010	0100
04	FREEZE STRM NO. 1 CONTROLS	0050	0300	0850	R134A	010	0100

Recommended Sampling Locations for CHILL STRM AND FREEZE STRM NO. 1

SAMM	Name	Sampling Locations
01	CHILL STRM (2-23-2-A)	1. Ovhd Center 2. 9” Above Deck Near Door
02	CHILL STRM CONTROLS	1. Filter Drier 2. TXV/Service Valve
03	FREEZE STRM NO. 1 (2-23-1-A)	1. Ovhd Center 2. 9” Above Deck Near Door
04	FREEZE STRM NO. 1 CONTROLS	1. Filter Drier 2. TXV/Service Valve

P2-4. FREEZE STRM NO. 2

RELAY DETAILS

Parameter	Relay 1	Relay 2	Relay 3	Relay 4
Operation	Continuous	Continuous	Continuous	Continuous
Mode	System	System	System	System
Logic	Any One	Any One	Any One	Any One
Pulse (m)	03	03	03	03
Inhibit (h)	00	00	00	00
Day Time (h)	06	06	06	06
Day Factor	2.8	2.8	2.8	2.8
Night Time (h)	18	18	18	18
Night Factor	2.8	2.8	2.8	2.8
SAMM 01	X	X	X	X
SAMM 02	X	X	X	X
SAMM 03	NOT USED			
SAMM 04	NOT USED			

SAMM DETAILS

Address	Name	Alert	Alarm	Critical	Refrigerant	Cycle Time (mins)	Pipe Length (ft)
01	FREEZE STRM NO. 2 (3-21-1-A)	0050	0300	0850	R134A	010	0100
02	FREEZE STRM NO. 2 CONTROLS	0050	0300	0850	R134A	010	0100
03	NOT USED						
04	NOT USED						

Recommended Sampling Locations for FREEZE STRM NO. 2

SAMM	Name	Sampling Locations
01	FREEZE STRM NO. 2 (3-21-1-A)	1. Ovhd Center 2. 9” Above Deck Near Door
02	FREEZE STRM NO. 2 CONTROLS	1. Filter Drier 2. TXV
03	NOT USED	
04	NOT USED	

P2-5. INERT GAS CYLINDER STRM

RELAY DETAILS

Parameter	Relay 1	Relay 2	Relay 3	Relay 4
Operation	Continuous	Continuous	Continuous	Continuous
Mode	System	System	System	System
Logic	Any One	Any One	Any One	Any One
Pulse (m)	03	03	03	03
Inhibit (h)	00	00	00	00
Day Time (h)	06	06	06	06
Day Factor	2.8	2.8	2.8	2.8
Night Time (h)	18	18	18	18
Night Factor	2.8	2.8	2.8	2.8
SAMM 01	X	X	X	X
SAMM 02	NOT USED			
SAMM 03	NOT USED			
SAMM 04	NOT USED			

SAMM DETAILS

Address	Name	Alert	Alarm	Critical	Refrigerant	Cycle Time (mins)	Pipe Length (ft)
01	INERT GAS CYL STRM (1-107-1-A)	0050	0300	0850	R134A	010	0100
02	NOT USED						
03	NOT USED						
04	NOT USED						

Recommended Sampling Locations for INERT GAS CYLINDER STRM

SAMM	Name	Sampling Locations
01	INERT GAS CYL STRM (1-107-1-A)	1. Ovhd Center 2. 9” Above Deck Near Door
02	NOT USED	
03	NOT USED	
04	NOT USED	

SECTION P3

(LSD 44-48)

P3-1. AC PLANTS NO. 1 & 2, AND REFR PLANTS NO. 1 & 2

RELAY DETAILS

Parameter	Relay 1	Relay 2	Relay 3	Relay 4
Operation	Continuous	Continuous	Continuous	Continuous
Mode	System	System	System	System
Logic	Any One	Any One	Any One	Any One
Pulse (m)	03	03	03	03
Inhibit (h)	00	00	00	00
Day Time (h)	06	06	06	06
Day Factor	2.8	2.8	2.8	2.8
Night Time (h)	18	18	18	18
Night Factor	2.8	2.8	2.8	2.8
SAMM 01	X	X	X	X
SAMM 02	X	X	X	X
SAMM 03	X	X	X	X
SAMM 04	X	X	X	X
SAMM 05	X	X	X	X
SAMM 06	X	X	X	X
SAMM 07	NOT USED			
SAMM 08	NOT USED			

SAMM DETAILS

Address	Name	Alert	Alarm	Critical	Refrigerant	Cycle Time (mins)	Pipe Length (ft)
01	NO. 1 REFR PLANT	0050	0300	0850	R134A	010	0100
02	NO. 2 REFR PLANT	0050	0300	0850	R134A	010	0100
03	NO. 1 AC PLANT	0050	0300	0850	R114 or R236FA	010	0100
04	NO. 2 AC PLANT	0050	0300	0850	R114 or R236FA	010	0100
05	PPO UNITS	0050	0300	0850	R114 or R236FA	010	0100
06	NO. 1 & 2 CWCV	0050	0300	0850	R114 or R236FA	010	0100
07	NOT USED						
08	NOT USED						

Recommended Sampling Locations for AC PLANTS NO. 1 & 2, AND REFR PLANTS NO. 1 & 2

SAMM	Name	Sampling Locations
01	NO. 1 REFR PLANT	1. CWCV/Condenser Area 2. Below Compressor Shaft Seal 3. Gageboard Test Connections 4. Oil Cooler Manifold
02	NO. 2 REFR PLANT	1. CWCV/Condenser Area 2. Below Compressor Shaft Seal 3. Gageboard Test Connections 4. Oil Cooler Manifold
03	NO. 1 AC PLANT	1. Motor Refrigerant Connections 2. C/D Valve 3. Test Connections 4. Refrigerant Filter
04	NO. 2 AC PLANT	1. Motor Refrigerant Connections 2. C/D Valve 3. Test Connections 4. Refrigerant Filter
05	PPO UNITS	1. Purged Gas Solenoid Outlet Valve 2. Receiver Hose Connections
06	NO. 1 & 2 CWCV	1. No. 1 AC Plant CWCV 2. No. 2 AC Plant CWCV
07	NOT USED	
08	NOT USED	

P3-2. AC PLANTS NO. 3 & 4

RELAY DETAILS

Parameter	Relay 1	Relay 2	Relay 3	Relay 4
Operation	Continuous	Continuous	Continuous	Continuous
Mode	System	System	System	System
Logic	Any One	Any One	Any One	Any One
Pulse (m)	03	03	03	03
Inhibit (h)	00	00	00	00
Day Time (h)	06	06	06	06
Day Factor	2.8	2.8	2.8	2.8
Night Time (h)	18	18	18	18
Night Factor	2.8	2.8	2.8	2.8
SAMM 01	X	X	X	X
SAMM 02	X	X	X	X
SAMM 03	X	X	X	X
SAMM 04	X	X	X	X

SAMM DETAILS

Address	Name	Alert	Alarm	Critical	Refrigerant	Cycle Time (mins)	Pipe Length (ft)
01	NO. 3 AC PLANT	0050	0300	0850	R114 or R236FA	010	0100
02	NO. 4 AC PLANT	0050	0300	0850	R114 or R236FA	010	0100
03	PPO UNITS	0050	0300	0850	R114 or R236FA	010	0100
04	NO. 3 & 4 CWCV	0050	0300	0850	R114 or R236FA	010	0100

Recommended Sampling Locations for AC PLANTS NO. 3 & 4

SAMM	Name	Sampling Locations
01	NO. 3 AC PLANT	1. Motor Refrigerant Connections 2. C/D Valve 3. Test Connections 4. Refrigerant Filter
02	NO. 4 AC PLANT	1. Motor Refrigerant Connections 2. C/D Valve 3. Test Connections 4. Refrigerant Filter
03	PPO UNITS	1. Purged Gas Solenoid Outlet Valve 2. Receiver Hose Connections
04	NO. 3 & 4 CWCV	1. No. 3 AC Plant CWCV 2. No. 4 AC Plant CWCV

P3-3. REFR SPACES

RELAY DETAILS

Parameter	Relay 1	Relay 2	Relay 3	Relay 4
Operation	Continuous	Continuous	Continuous	Continuous
Mode	System	System	System	System
Logic	Any One	Any One	Any One	Any One
Pulse (m)	03	03	03	03
Inhibit (h)	00	00	00	00
Day Time (h)	06	06	06	06
Day Factor	2.8	2.8	2.8	2.8
Night Time (h)	18	18	18	18
Night Factor	2.8	2.8	2.8	2.8
SAMM 01	X	X	X	X
SAMM 02	X	X	X	X
SAMM 03	X	X	X	X
SAMM 04	X	X	X	X
SAMM 05	X	X	X	X
SAMM 06	X	X	X	X
SAMM 07	NOT USED			
SAMM 08	NOT USED			

SAMM DETAILS

Address	Name	Alert	Alarm	Critical	Refrigerant	Cycle Time (mins)	Pipe Length (ft)
01	FREEZE STRM NO. 2 (3-21-1-A)	0050	0300	0850	R134A	010	0100
02	FREEZE STRM NO. 2 CONTROLS IN PASSAGEWAY (3-25-1-L)	0050	0300	0850	R134A	010	0100
03	FREEZE STRM NO. 1 (2-23-1-A)	0050	0300	0850	R134A	010	0100
04	FREEZE STRM NO. 1 CONTROLS IN PASSAGEWAY (2-25-1-L)	0050	0300	0850	R134A	010	0100
05	CHILL STRM (2-23-2-A)	0050	0300	0850	R134A	010	0100
06	CHILL STRM CONTROLS IN PASSAGEWAY (2-21-2-L)	0050	0300	0850	R134A	010	0100
07	NOT USED						
08	NOT USED						

Recommended Sampling Locations for REFR SPACES

SAMM	Name	Sampling Locations
01	FREEZE STRM NO. 2 (3-21-1-A)	1. Ovhd Center 2. 9” Above Deck Near Door
02	FREEZE STRM NO. 2 CONTROLS IN PASSAGEWAY (3-25-1-L)	1. Filter Drier 2. TXV/Service Valve
03	FREEZE STRM NO. 1 (2-23-1-A)	1. Ovhd Center 2. 9” Above Deck Near Door
04	FREEZE STRM NO. 1 CONTROLS IN PASSAGEWAY (2-25-1-L)	1. Filter Drier 2. TXV/Service Valve
05	CHILL STRM (2-23-2-A)	1. Ovhd Center 2. 9” Above Deck Near Door
06	CHILL STRM CONTROLS IN PASSAGEWAY (2-21-2-L)	1. Filter Drier 2. TXV/Service Valve
07	NOT USED	
08	NOT USED	

P3-4. INERT GAS CYLINDER STRM

RELAY DETAILS

Parameter	Relay 1	Relay 2	Relay 3	Relay 4
Operation	Continuous	Continuous	Continuous	Continuous
Mode	System	System	System	System
Logic	Any One	Any One	Any One	Any One
Pulse (m)	03	03	03	03
Inhibit (h)	00	00	00	00
Day Time (h)	06	06	06	06
Day Factor	2.8	2.8	2.8	2.8
Night Time (h)	18	18	18	18
Night Factor	2.8	2.8	2.8	2.8
SAMM 01	X	X	X	X
SAMM 02	X	X	X	X
SAMM 03	NOT USED			
SAMM 04	NOT USED			

SAMM DETAILS

Address	Name	Alert	Alarm	Critical	Refrigerant	Cycle Time (mins)	Pipe Length (ft)
01	INERT GAS CYL STRM (1-107-1-A)	0050	0300	0850	R114 or R236FA	010	0100
02	INERT GAS CYL STRM (1-107-1-A)	0050	0300	0850	R134A	010	0100
03	NOT USED						
04	NOT USED						

Recommended Sampling Locations for INERT GAS CYLINDER STRM

SAMM	Name	Sampling Locations
01	INERT GAS CYL STRM (1-107-1-A)	1. Ovhd Center
02	INERT GAS CYL STRM (1-107-1-A)	1. Ovhd Center
03	NOT USED	
04	NOT USED	

SECTION P4
(LSD 49 CLASS)

P4-1. AC PLANTS NO. 1, 2, & 3

RELAY DETAILS

Parameter	Relay 1	Relay 2	Relay 3	Relay 4
Operation	Continuous	Continuous	Continuous	Continuous
Mode	System	System	System	System
Logic	Any One	Any One	Any One	Any One
Pulse (m)	03	03	03	03
Inhibit (h)	00	00	00	00
Day Time (h)	06	06	06	06
Day Factor	2.8	2.8	2.8	2.8
Night Time (h)	18	18	18	18
Night Factor	2.8	2.8	2.8	2.8
SAMM 01	X	X	X	X
SAMM 02	X	X	X	X
SAMM 03	X	X	X	X
SAMM 04	X	X	X	X
SAMM 05	X	X	X	X
SAMM 06	X	X	X	X
SAMM 07	X	X	X	X
SAMM 08	NOT USED			

SAMM DETAILS

Address	Name	Alert	Alarm	Critical	Refrigerant	Cycle Time (mins)	Pipe Length (ft)
01	NO. 1 REFR PLANT	0050	0300	0850	R134A	010	0100
02	NO. 2 REFR PLANT	0050	0300	0850	R12 or R134A	010	0100
03	NO. 1 AC PLANT	0050	0300	0850	R114 or R236FA or R134A	010	0100
04	NO. 2 AC PLANT	0050	0300	0850	R114 or R236FA or R134A	010	0100
05	NO. 3 AC PLANT	0050	0300	0850	R114 or R236FA or R134A	010	0100
06	CWCV AC PLANTS 1, 2, & 3	0050	0300	0850	R114 or R236FA or R134A	010	0100
07	PPO UNIT	0050	0300	0850	R114 or R236FA or R134A	010	0100
08	NOT USED						

Recommended Sampling Locations for AC PLANTS NO. 1, 2, & 3

SAMM	Name	Sampling Locations
01	NO. 1 REFR PLANT	1. CWCV/Condenser Area 2. Below Compressor Shaft Seal 3. Gageboard Test Connections 4. Dehydrator/Charging Valves
02	NO. 2 REFR PLANT	1. CWCV/Condenser Area 2. Below Compressor Shaft Seal 3. Gageboard Test Connections 4. Dehydrator/Charging Valves
03	NO. 1 AC PLANT	1. Hot Gas Bypass Valve 2. C/D Valve 3. Test Connections 4. Below Compressor
04	NO. 2 AC PLANT	1. Hot Gas Bypass Valve 2. C/D Valve 3. Test Connections 4. Below Compressor
05	NO. 3 AC PLANT	1. Hot Gas Bypass Valve 2. C/D Valve 3. Test Connections 4. Below Compressor
06	CWCV AC PLANTS 1, 2, & 3	1. No. 1 AC Plant CWCV 2. No. 2 AC Plant CWCV 3. No. 3 AC Plant CWCV
07	PPO UNIT	1. Receiver Drain 2. Valve Manifold 3. Purge Solenoid
08	NOT USED	

P4-2. AC PLANTS NO. 4 & 5

RELAY DETAILS

Parameter	Relay 1	Relay 2	Relay 3	Relay 4
Operation	Continuous	Continuous	Continuous	Continuous
Mode	System	System	System	System
Logic	Any One	Any One	Any One	Any One
Pulse (m)	03	03	03	03
Inhibit (h)	00	00	00	00
Day Time (h)	06	06	06	06
Day Factor	2.8	2.8	2.8	2.8
Night Time (h)	18	18	18	18
Night Factor	2.8	2.8	2.8	2.8
SAMM 01	X	X	X	X
SAMM 02	X	X	X	X
SAMM 03	X	X	X	X
SAMM 04	X	X	X	X

SAMM DETAILS

Address	Name	Alert	Alarm	Critical	Refrigerant	Cycle Time (mins)	Pipe Length (ft)
01	NO. 4 AC PLANT	0050	0300	0850	R114 or R236FA or R134A	010	0100
02	NO. 5 AC PLANT	0050	0300	0850	R114 or R236FA or R134A	010	0100
03	CWCV AC PLANTS 4 & 5	0050	0300	0850	R114 or R236FA or R134A	010	0100
04	PPO UNIT	0050	0300	0850	R114 or R236FA or R134A	010	0100

Recommended Sampling Locations for AC PLANTS NO. 4 & 5

SAMM	Name	Sampling Locations
01	NO. 4 AC PLANT	1. Hot Gas Bypass Valve 2. C/D Valve 3. Test Connections 4. Below Compressor
02	NO. 5 AC PLANT	1. Hot Gas Bypass Valve 2. C/D Valve 3. Test Connections 4. Below Compressor
03	CWCV AC PLANT 4 & 5	1. No. 4 AC Plant CWCV 2. No. 5 AC Plant CWCV
04	PPO UNIT	1. Receiver Drain 2. Purge Solenoid

P4-3. REFR SPACES

RELAY DETAILS

Parameter	Relay 1	Relay 2	Relay 3	Relay 4
Operation	Continuous	Continuous	Continuous	Continuous
Mode	Group	System	System	System
Logic	Any One	Any One	Any One	Any One
Pulse (m)	03	03	03	03
Inhibit (h)	00	00	00	00
Day Time (h)	06	06	06	06
Day Factor	2.8	2.8	2.8	2.8
Night Time (h)	18	18	18	18
Night Factor	2.8	2.8	2.8	2.8
SAMM 01		X	X	X
SAMM 02		X	X	X
SAMM 03		X	X	X
SAMM 04		X	X	X
SAMM 05		X	X	X
SAMM 06		X	X	X
SAMM 07	X	X	X	X
SAMM 08	X	X	X	X

SAMM DETAILS

Address	Name	Alert	Alarm	Critical	Refrigerant	Cycle Time (mins)	Pipe Length (ft)
01	FREEZE BOX NO. 2 (3-21-1-A)	0050	0300	0850	R12 or R134A	010	0100
02	FREEZE BOX NO. 2 CONTROLS (3-25-1-L)	0050	0300	0850	R12 or R134A	010	0100
03	FREEZE BOX NO. 1 (2-23-1-A)	0050	0300	0850	R12 or R134A	010	0100
04	FREEZE BOX NO. 1 CONTROLS (2-25-1-L)	0050	0300	0850	R12 or R134A	010	0100
05	CHILL BOX (2-23-2-A)	0050	0300	0850	R12 or R134A	010	0100
06	CHILL BOX CONTROLS (2-21-2-L)	0050	0300	0850	R12 or R134A	010	0100
07	INERT GAS CYLINDER STRM (2-14-4-A)	0050	0300	0850	R12 or R134A	010	0100
08	INERT GAS CYLINDER STRM (2-14-4-A)	0050	0300	0850	R114 or R236FA	010	0100

Recommended Sampling Locations for REFR SPACES

SAMM	Name	Sampling Locations
01	FREEZE BOX NO. 2 (3-21-1-A)	1. Unit Cooler Discharge 2. Unit Cooler Discharge 3. 9” Above Deck Near Door
02	FREEZE BOX NO. 2 CONTROLS (3-25-1-L)	1. Filter Drier 2. TXV
03	FREEZE BOX NO. 1 (2-23-1-A)	1. Unit Cooler Discharge 2. 9” Above Deck Near Door
04	FREEZE BOX NO. 1 CONTROLS (2-25-1-L)	1. Filter Drier 2. TXV
05	CHILL BOX (2-23-2-A)	1. Unit Cooler Discharge 2. Unit Cooler Discharge 3. 9” Above Deck Near Door
06	CHILL BOX CONTROLS (2-21-2-L)	1. Filter Drier 2. TXV
07	INERT GAS CYLINDER STRM (2-14-4-A)	1. Ovhd Center
08	INERT GAS CYLINDER STRM (2-14-4-A)	1. Ovhd Center